NOTES
1. ALL DIMENSION IN INCHES
2. TOLERANCES .XXX ±.005 UNLESS NOTED
3. BOND AND RIVET TOGETHER JUNCTIONS OF WHEEL STRUT, STEERING HUB, AND WHEEL DRIVE HOUSING. USE PILOT HOLES FOR RIVET LOCATIONS. USE 9309 EPOXY FOR BONDING AND 5 MIL BOND WIRE.

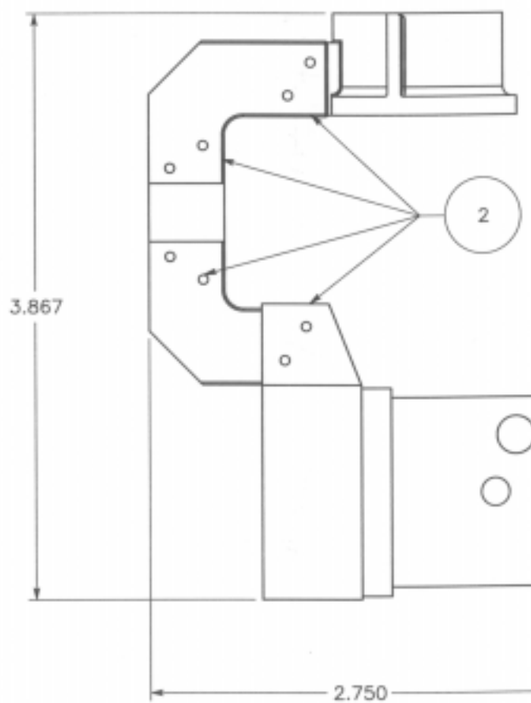

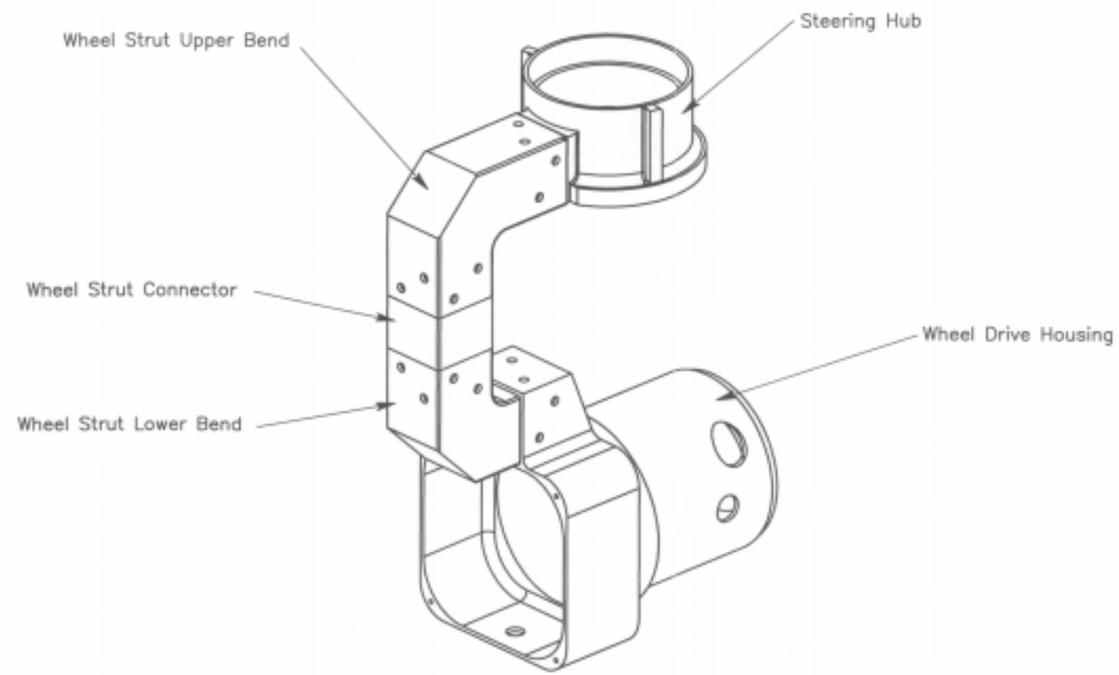

DATE 7/15/98			
DWG TITLE RIVETED WHEEL STRUT ASSEMBLY			
SUBSYSTEM Wheel Drive & Steering Actuators			SYSTEM Mobility Subsystem
ENGINEER Lisa Reid	SECTION 352		PHONE 4-4796
SIZE B	PROJECT ET Rover		DWG NO. 4401
SCALE 1:2	MATERIAL AL 7075-T7	QUANTITY 30	SHEET 1 of 1

NOTES

1. ALL DIMENSION IN INCHES
2. TOLERANCES .XXX ±.005 UNLESS NOTED
3. BOND AND RIVET TOGETHER JUNCTIONS OF WHEEL STRUT, STEERING HUB, AND WHEEL DRIVE HOUSING. USE PILOT HOLES FOR RIVET LOCATIONS. USE 9309 EPOXY FOR BONDING.

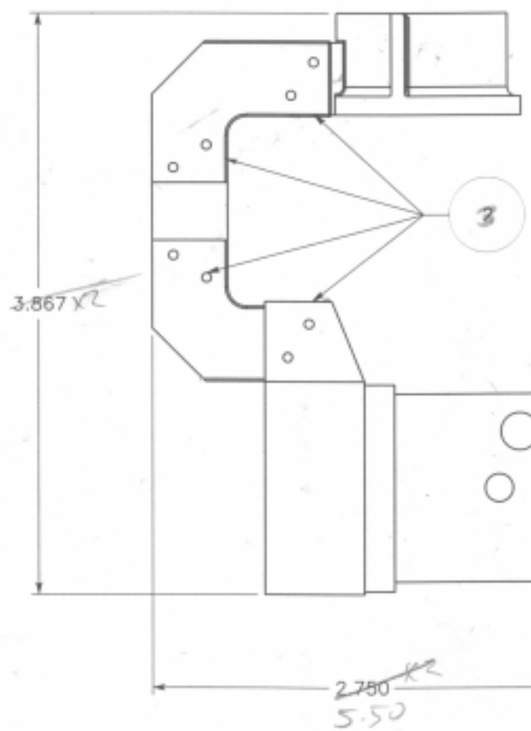

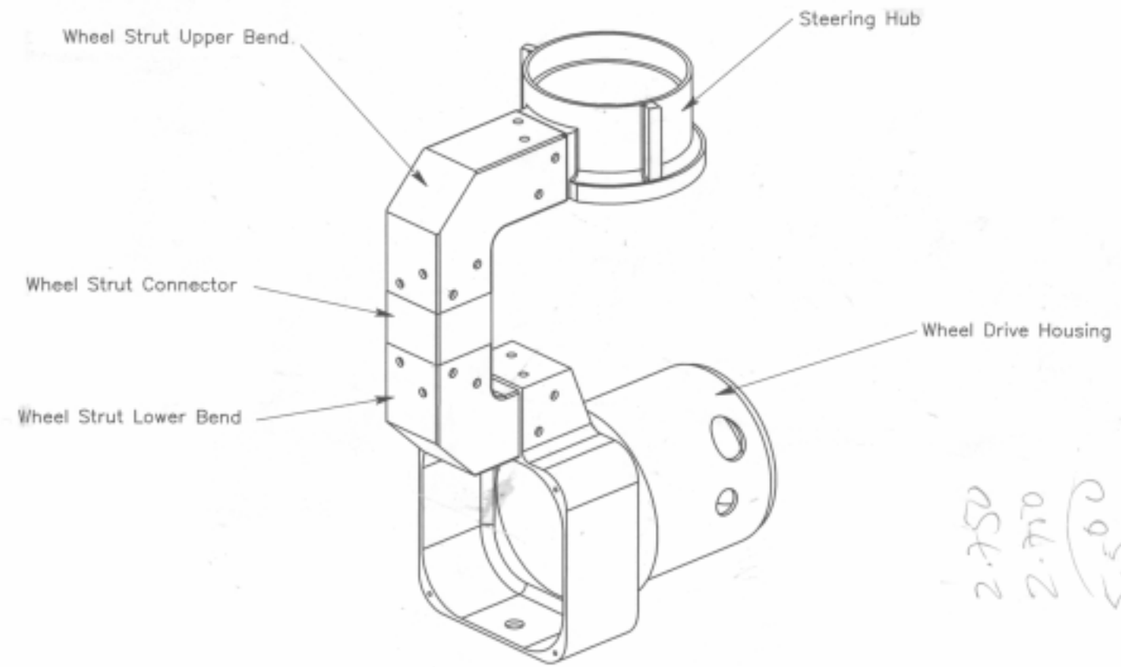

3.867
3.867
7.734

DATE 7/15/98			
DWG TITLE RIVETED WHEEL STRUT ASSEMBLY			
SUBSYSTEM Wheel Drive & Steering Actuators			SYSTEM Mobility Subsystem
ENGINEER Lisa Reid	SECTION 352		PHONE 4-4796
SIZE B	PROJECT ET Rover		DWG NO. 4401
SCALE 1:2	MATERIAL AL 7075-T7	QUANTITY 30	SHEET 1 of 1