MASS ESTIMATE: 0.671 LBS (305G)

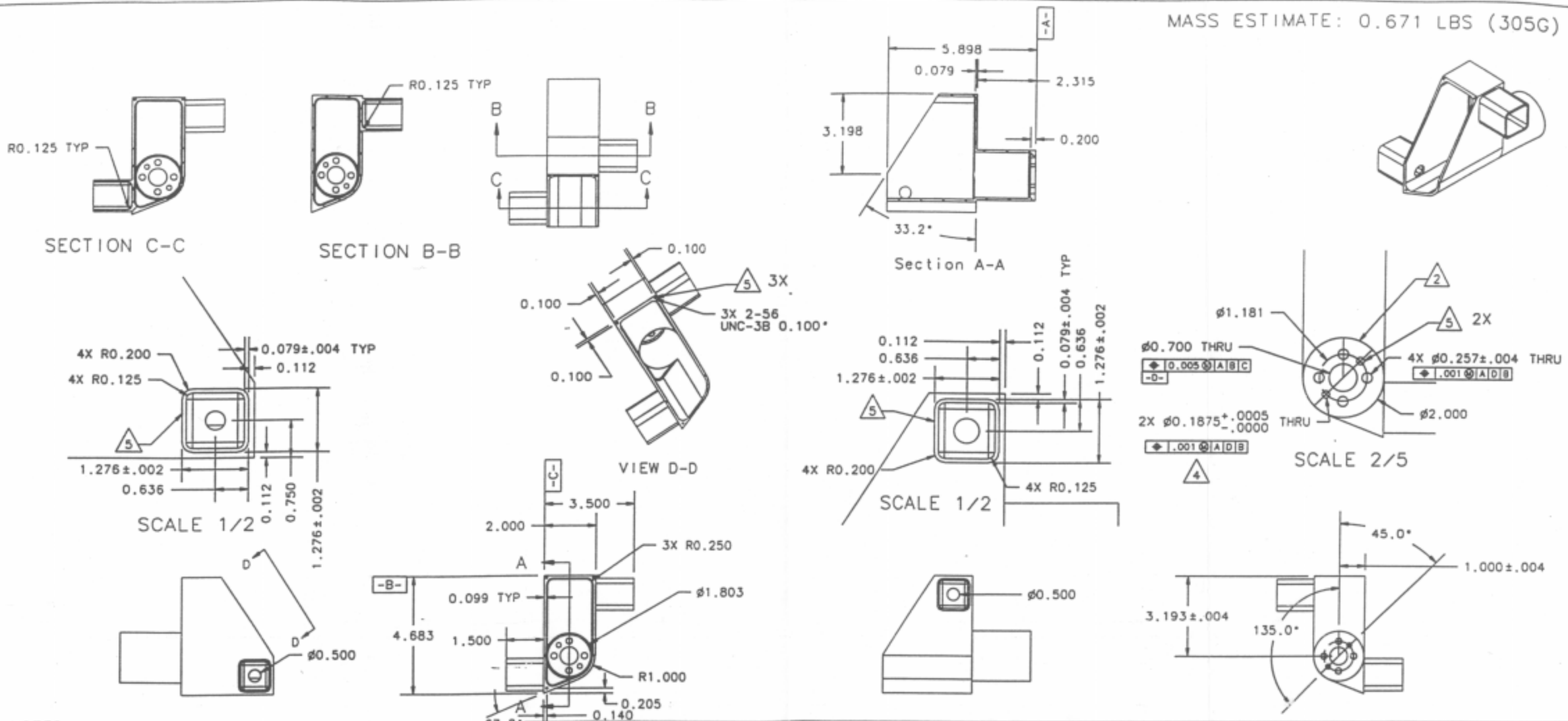

NOTES:

1. REMOVE ALL BURRS/SHARP EDGES 0.03"-0.050"
2. -1 SHOWN. -2 IS MIRROR OF -1 ABOUT THE PLANE DEFINED BY THIS FACE.
3. FAB 4 EA -1 AND -2
4. 2X ø0.187 HOLE TO PRESS FIT WITH SUPPLIED ø3/16" DOWEL PINS
5. MASK 3X 2-56 HOLES, 2X ø0.1875 HOLES AND OUTSIDE SURFACES OF 2X 1.276 SQUARE FEATURES BEFORE ANODIZATION
6. ANODIZE PER MIL-A-8625, TYPE II, CLASS 2, COLOR BLUE EXCEPT WHERE INDICATED PER NOTE 5

QTY REQD	ITEM NO	REF DES	FSCM NO	PART OR IDENTIFYING NO	NOMENCLATURE OR DESCRIPTION	SPECIFICATION	MATERIAL OR NOTE

PARTS LIST

5000	ET ROVER
NEXT ASSEMBLY	USED ON
APPLICATION	

UNLESS OTHERWISE SPECIFIED DIMENSIONS ARE IN INCHES
TOLERANCES
DECIMALS .XX ± .03 .XXX ± .010
ANGLES ± 1/2°
MACHINE FINISH
DO NOT SCALE DRAWING
INTERPRET DWG PER MIL-STD-100

MATERIAL
7075-T7351

CONTRACT NO
APPD DATE
DWN SATISH KRISHNAN 7/6/98
CHK
STRUCT
MATL
THRM CONT
ENGR
DSGN SUPV

JET PROPULSION LABORATORY
CALIFORNIA INSTITUTE OF TECHNOLOGY
PASADENA, CA 91109
RELEASED THROUGH SECTION 351

JEFF TUBE CONNECTOR - ET ROVER

SIZE	CAGE NO		REV
B	23835	5010	A
SCALE 1/4	UNCLASSIFIED	SHEET 1 OF 1	

CAD GENERATED

REV 6/95