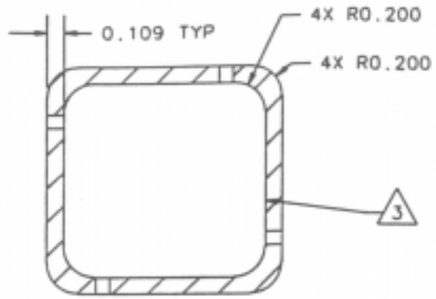


SECTION A-A

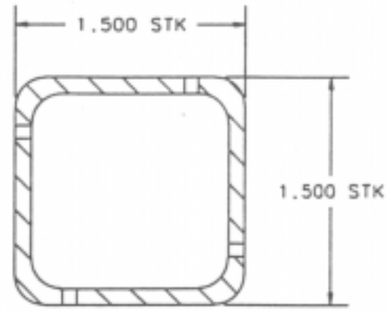


SECTION B-B

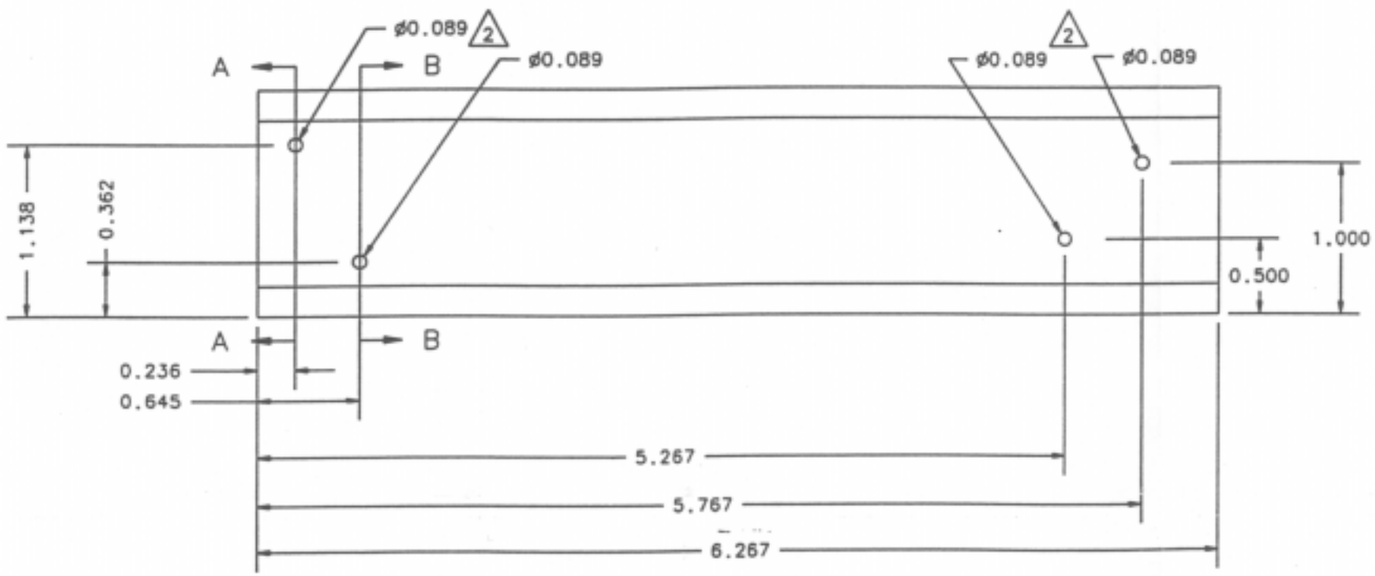


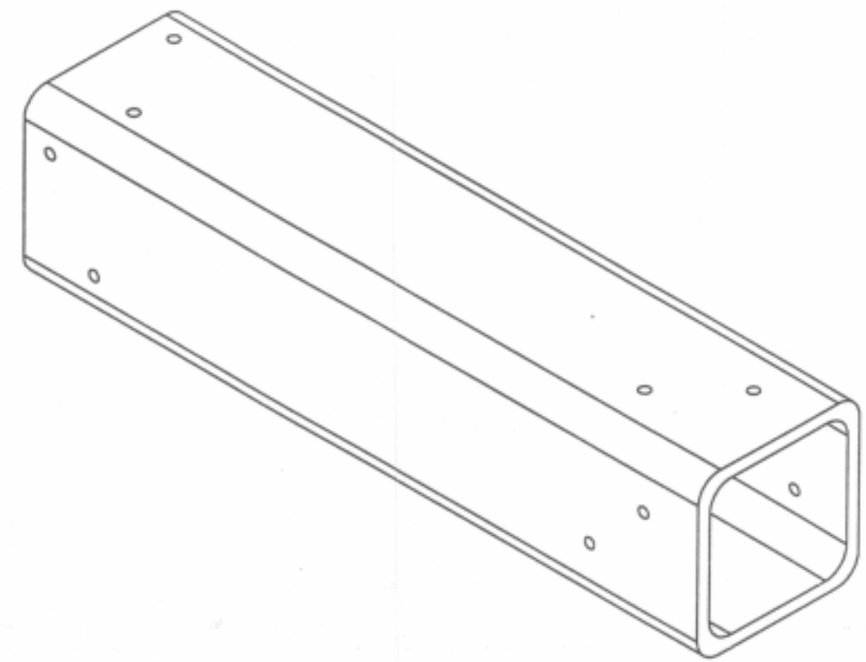

MASS ESTIMATE: 0.38 LBS (173 G)

NOTES:

1. REMOVE ALL BURRS AND SHARP EDGES 0.003" - 0.010"
2. LOCATIONS OF THE 2 ø0.089 HOLES ON THE OTHER THREE SIDES ARE IDENTICAL TO THE LOCATIONS ON THE SIDE SHOWN
3. MASK INSIDE SURFACES OF TUBE 2" DEEP ON BOTH ENDS BEFORE ANODIZATION
4. ANODIZE PER MIL SPEC-A-8625, TYPE II CLASS 2, COLOR BLUE EXCEPT WHERE INDICATED PER NOTE 3
5. FAB 8 PIECES

| QTY REQD | | ITEM NO | REF DES | FSCM NO | PART OR IDENTIFYING NO | NOMENCLATURE OR DESCRIPTION | SPECIFICATION | MATERIAL OR NOTE |
|---|---|---|---|---|---|---|---|---|

PARTS LIST

| | |
|---|---|
| 5000 | ET ROVER |
| NEXT ASSEMBLY | USED ON |
| APPLICATION | |

UNLESS OTHERWISE SPECIFIED
DIMENSIONS ARE IN INCHES
TOLERANCES
DECIMALS .XX ± .03 .XXX ± .010
ANGLES ± 1/2°
MACHINE FINISH √
DO NOT SCALE DRAWING
INTERPRET DWG PER MIL-STD-100

MATERIAL
7075 - T6511

CONTRACT NO
APPD DATE
DWN SATISH KRISHNAN 7/1/98
CHK
STRUCT
MATL
THERM CONT
ENGR
DSGN SUPV

JET PROPULSION LABORATORY
CALIFORNIA INSTITUTE OF TECHNOLOGY
PASADENA, CA 91109
RELEASED THROUGH SECTION 351

BACK ROCKER ARM - ET ROVER

| SIZE | CAGE NO | | REV |
|---|---|---|---|
| B | 23835 | 5030 | A |
| SCALE 1/1 | UNCLASSIFIED | SHEET 1 OF 1 | |

CAD GENERATED

REV 6/95