REVISIONS

LTR	DESCRIPTION	CODE	DWN	CHK	STRUCT	MATL	THRM CONT			ENGR	DSGN SUPV	DATA MGT	RELEASE DATE
A	INITIAL RELEASE		SEE TITLE BLOCK										

MASS ESTIMATE: 0.029 LBS (13 G)

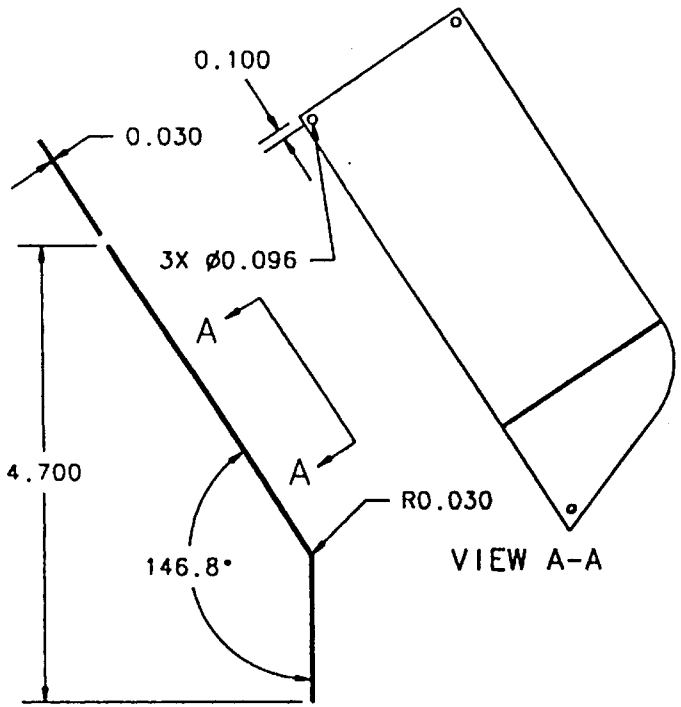

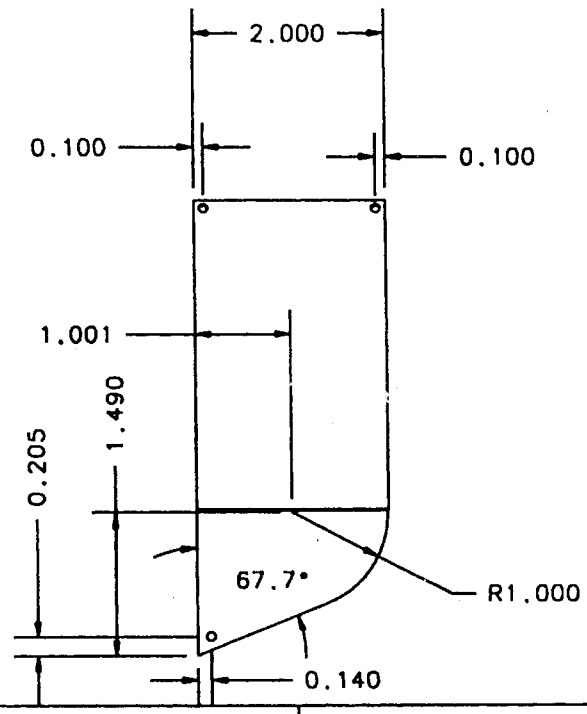

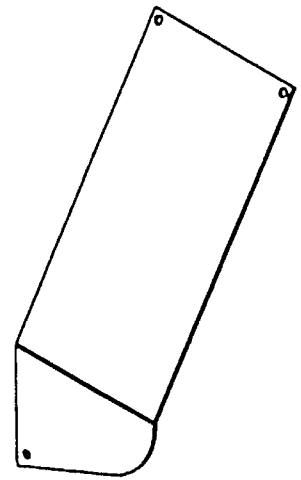

NOTES:

1. REMOVE ALL BURRS/SHARP EDGES 0.030-0.050"
2. ANODIZE PER MIL-A-8625 TYPE II, CLASS 2, COLOR BLUE

5000	ET ROVER
NEXT ASSEMBLY	USED ON
APPLICATION	

UNLESS OTHERWISE SPECIFIED
DIMENSIONS ARE IN INCHES
TOLERANCES
DECIMALS .XX ± .03 .XXX ± .010
ANGLES ± 1/2°
MACHINE FINISH √
DO NOT SCALE DRAWING
INTERPRET DWG PER MIL-STD-100

MATERIAL
5052

CONTRACT NO

APPD DATE

DWN	SATISH KRISHNAN	7/1/98
CHK		
STRUCT		
MATL		
THRM CONT		
ENGR		
DSGN SUPV		

JET PROPULSION LABORATORY
CALIFORNIA INSTITUTE OF TECHNOLOGY
PASADENA, CA 91109
RELEASED THROUGH SECTION 351

JEFF TUBE CONNECTOR CAP - ET ROVER

SIZE	CAGE NO		REV
A	23835	5040-1	A
SCALE 1/2	UNCLASSIFIED	SHEET 1 OF 1	

REV 6/95