A

REVISIONS

LTR	DESCRIPTION	CODE	DWN	CHK	STRUCT	MATL	THRM CONT			ENGR	DSGN SUPV	DATA MGT	RELEASE DATE
A	INITIAL RELEASE		SEE TITLE BLOCK										

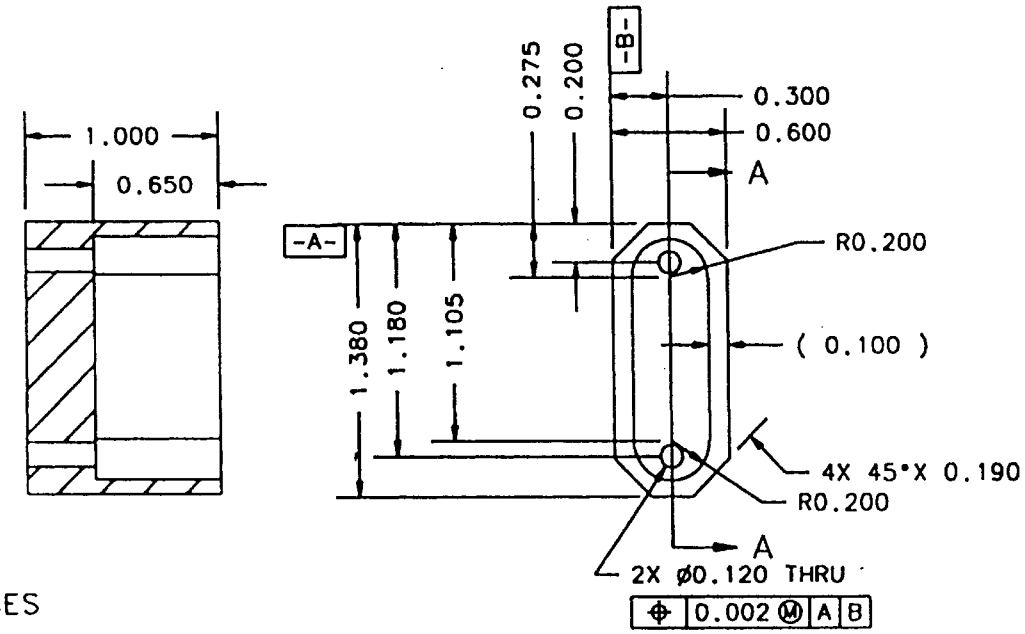

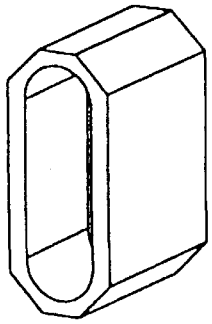

NOTES:

1. FAB 20 PIECES

MASS ESTIMATE: 0.023 LBS (10.4 G)

5100	ET ROVER
NEXT ASSEMBLY	USED ON
APPLICATION	

UNLESS OTHERWISE SPECIFIED
DIMENSIONS ARE IN INCHES
TOLERANCES
DECIMALS .XX ± .03 .XXX ± .010
ANGLES ± 1/2°
MACHINE FINISH √
DO NOT SCALE DRAWING
NTERPRET DWG PER MIL-STD-100

MATERIAL
DELRIN 500

CONTRACT NO

APPD DATE

DWN	SATISH KRISHNAN	6/16/98
CHK		
STRUCT		
MATL		
THRM CONT		
ENGR		
DSGN SUPV		

JET PROPULSION LABORATORY
CALIFORNIA INSTITUTE OF TECHNOLOGY
PASADENA, CA 91109

RELEASED THROUGH SECTION 351

BOGIE STOPPER - ET ROVER

SIZE	CAGE NO		REV
A	23835	5120	A
SCALE 1/1	UNCLASSIFIED	SHEET 1 OF 1	