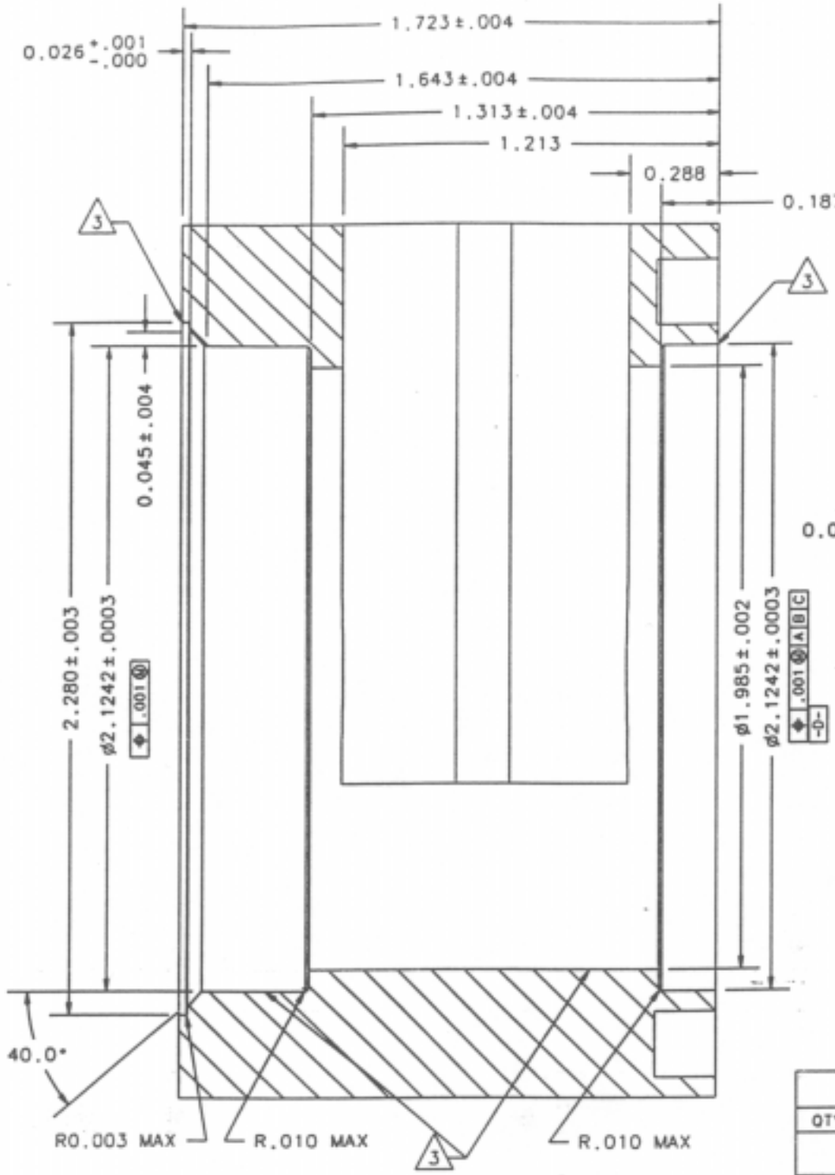

SECTION A-A
SCALE 2/1

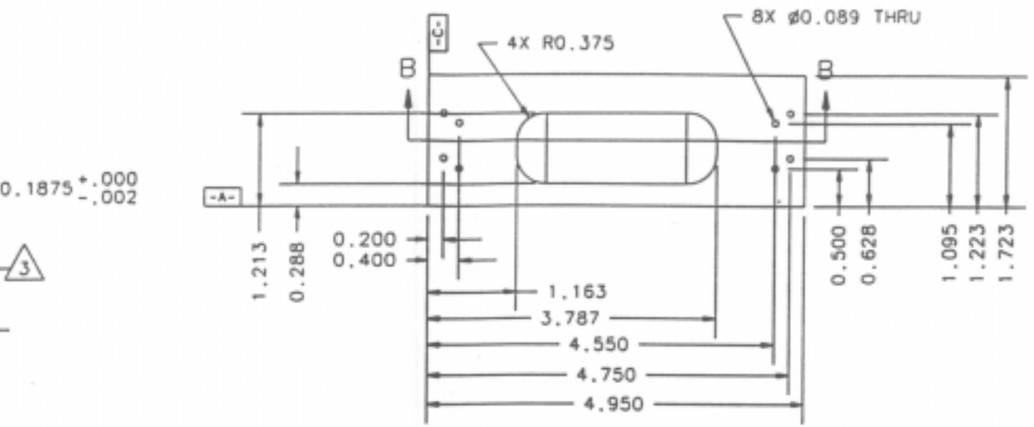

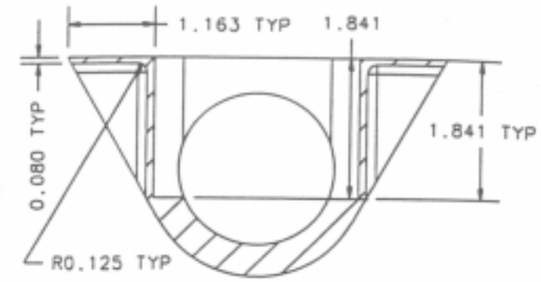

SECTION B-B

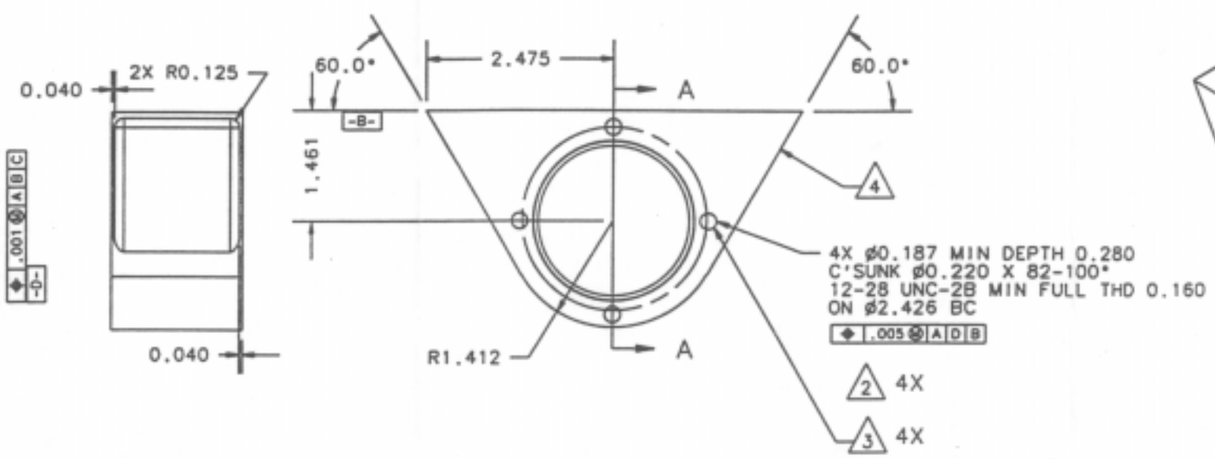

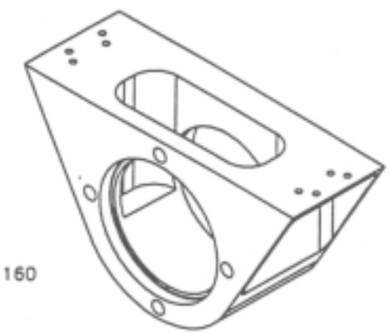

MASS ESTIMATE: 0.529 LBS (240 G)

NOTES:

1. REMOVE ALL BURRS AND SHARP EDGES 0.003" - 0.010"
2. INSTALL INSERT KNC0632J PER JPL SPEC FS505925
3. MASK 4X 12-28 HOLES AND ALL ø2.1242, ø1.985, AND ø2.280 HOLES BEFORE ANODIZATION
4. ANODIZE PER MIL-A-8625, TYPE II, CLASS 2, COLOR BLUE EXCEPT WHERE INDICATED PER NOTE 3
5. FAB 10 PIECES

QTY REQD		ITEM NO	REF DES	FSCM NO	PART OR IDENTIFYING NO	NOMENCLATURE OR DESCRIPTION	SPECIFICATION	MATERIAL OR NOTE

PARTS LIST

UNLESS OTHERWISE SPECIFIED
DIMENSIONS ARE IN INCHES
TOLERANCES
DECIMALS .XX ± .03 .XXX ± .010
ANGLES ± 1/2°
MACHINE FINISH
DO NOT SCALE DRAWING
INTERPRET DWG PER MIL-STD-100

CONTRACT NO
APPD DATE
DWN SATISH KRISHNAN 7/1/98
CHK
STRUCT
MATL
THRM CONT
ENGR
DSGN SUPV

JET PROPULSION LABORATORY
CALIFORNIA INSTITUTE OF TECHNOLOGY
PASADENA, CA 91109
RELEASED THROUGH SECTION 351

BOGIE PIVOT HOUSING - ET ROVER

NEXT ASSEMBLY	USED ON
5200	ET ROVER

APPLICATION

MATERIAL: 7075-T7351

SIZE	CAGE NO		REV
B	23835	5210	A

SCALE 1/2 | UNCLASSIFIED | SHEET 1 OF 1

CAD GENERATED

REV 6/95