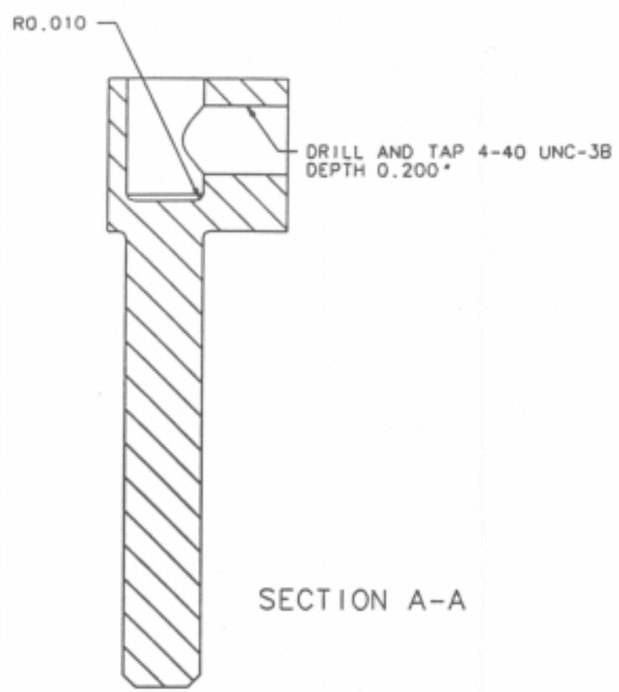

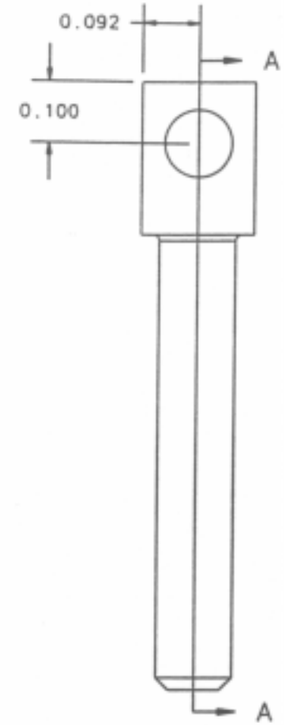

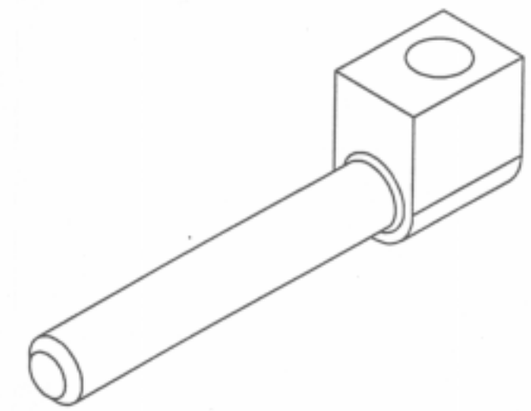

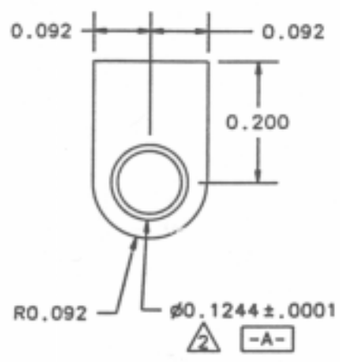

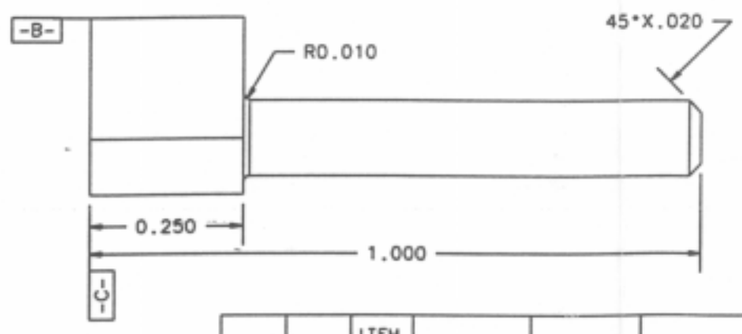

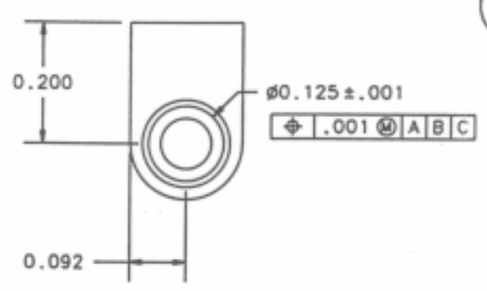

NOTES:

1. REMOVE ALL SHARP EDGES AND BURRS 0.003" - 0.010"
2. ø0.1244 HOLE TO SLIP FIT WITH SHAFT OF SUPPLIED POTENTIOMETER (PN 6173R50KL.5)
3. FAB 10 PIECES

QTY REQD	ITEM NO	REF DES	FSCM NO	PART OR IDENTIFYING NO	NOMENCLATURE OR DESCRIPTION	SPECIFICATION	MATERIAL OR NOTE

PARTS LIST

5200	ET ROVER
NEXT ASSEMBLY	USED ON
APPLICATION	

UNLESS OTHERWISE SPECIFIED DIMENSIONS ARE IN INCHES
TOLERANCES
DECIMALS .XX ± .03 .XXX ± .010 ANGLES ± 1/2°
MACHINE FINISH
DO NOT SCALE DRAWING
INTERPRET DWG PER MIL-STD-100

MATERIAL
7075 - T7351

CONTRACT NO
APPD DATE
DWN SATISH KRISHNAN 5/27/98
CHK
STRUCT
MATL
THRM CONT
ENGR
DSGN SUPV

JET PROPULSION LABORATORY
CALIFORNIA INSTITUTE OF TECHNOLOGY
PASADENA, CA 91109
RELEASED THROUGH SECTION 351

POTENTIOMETER EXTENSION - ET ROVER

SIZE	CAGE NO		REV
B	23835	5220	A
SCALE 4/1	UNCLASSIFIED	SHEET 1 OF 1	

CAD GENERATED

REV 6/95