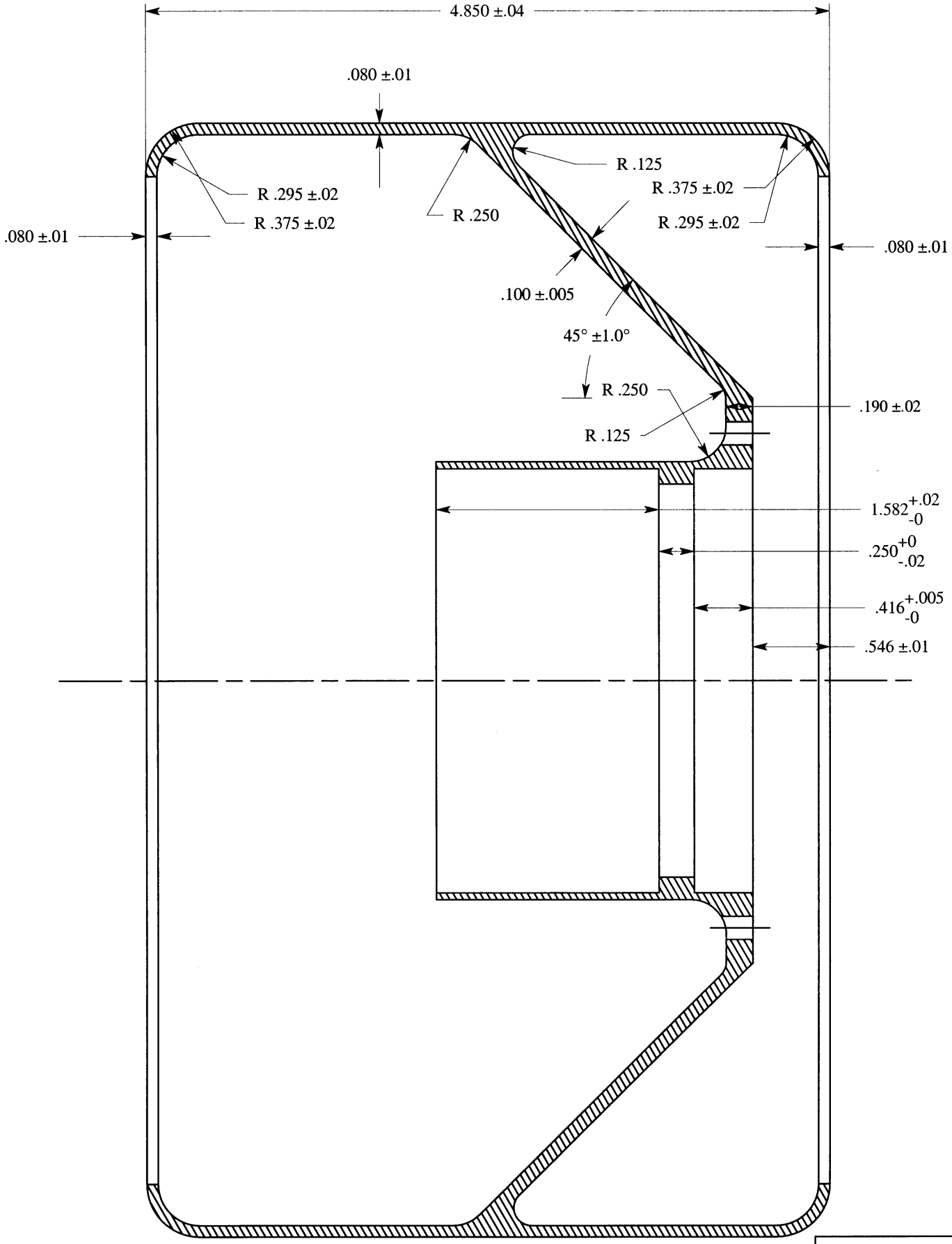

JET PROPULSION LABORATORY
CALIFORNIA INSTITUTE OF TECHNOLOGY
PASADENA, CALIFORNIA

DIMENSIONS ARE IN INCHES UNLESS OTHERWISE SPECIFIED

TOLERANCES:

FRACTIONS	DECIMALS	ANGLES
1/32	.XX = 0.005 .XXX = 0.005 .XXXX = 0.001	0.1°

DRAWING TITLE: ET Rover Wheel, Sectional

PROJECT: ET Rover		DWG NO.: XXXXXX-X
DRAWN: BRETT KENNEDY (818) 354-6444	DATE: 4/29/97	REV: 1
SCALE: None	MATERIAL: AL 7075-T6	QUANTITY: 34

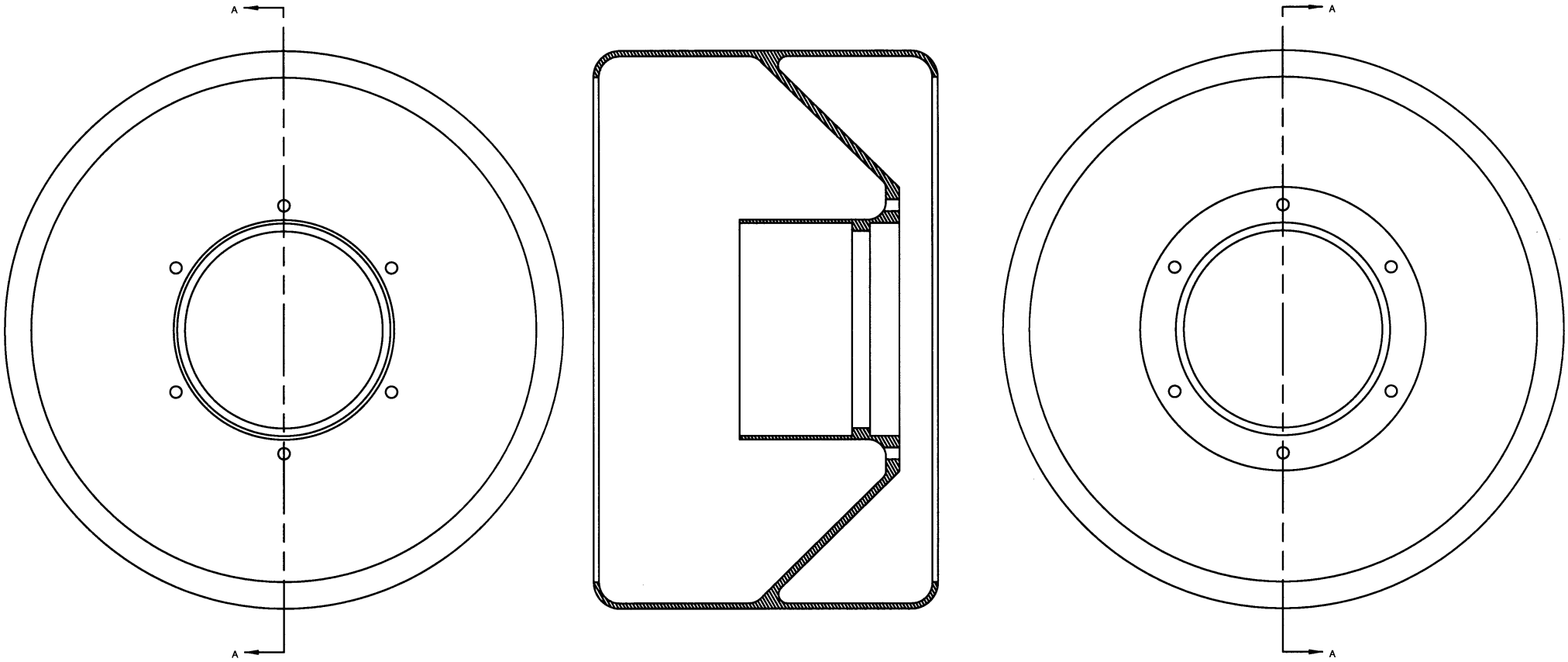

JET PROPULSION LABORATORY

CALIFORNIA INSTITUTE OF TECHNOLOGY
PASADENA, CALIFORNIA

DIMENSIONS ARE IN INCHES
UNLESS OTHERWISE SPECIFIED

TOLERANCES:

FRACTIONS	DECIMALS	ANGLES
1/32	.XX = 0.005 .XXX = 0.005 .XXXX = 0.001	0.1°

DRAWING TITLE:

ET Rover Wheel

PROJECT: ET Rover	DWG NO.: XXXXXX-X	
DRAWN: BRETT KENNEDY (818) 354-6444	DATE: 4/29/97	REV: 1
SCALE: None	MATERIAL: AL 7075-T6	QUANTITY: 34

Back View

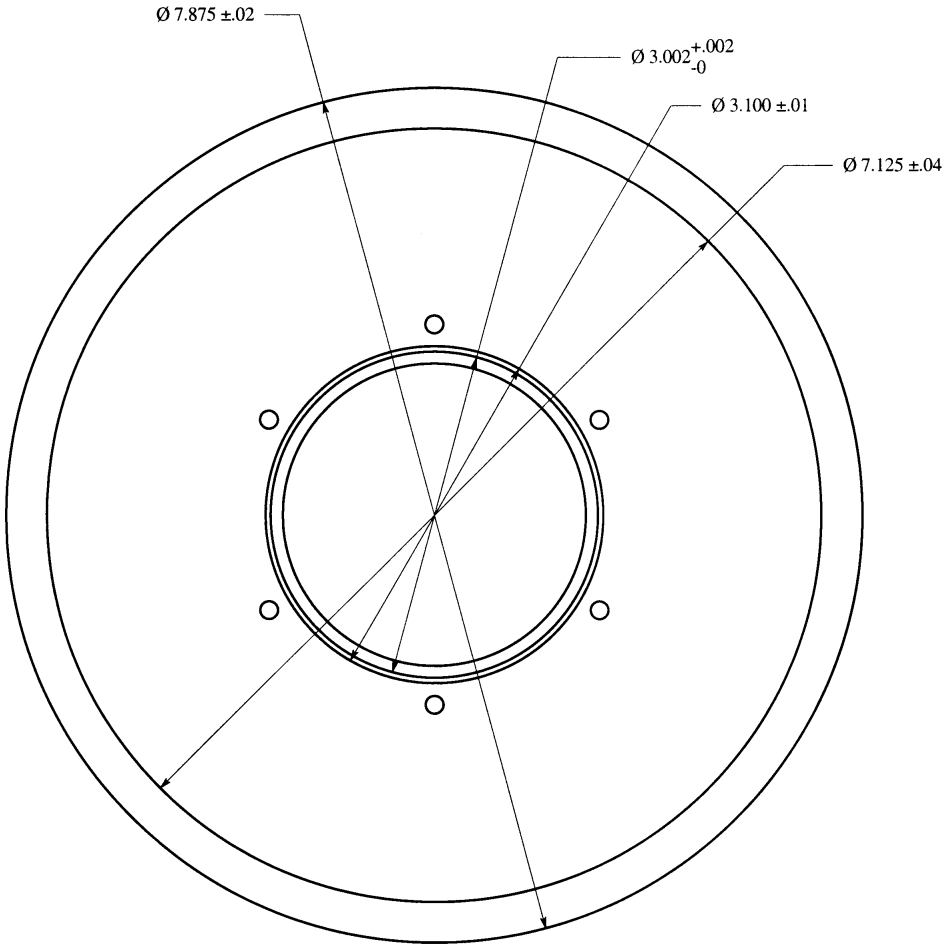

Front View

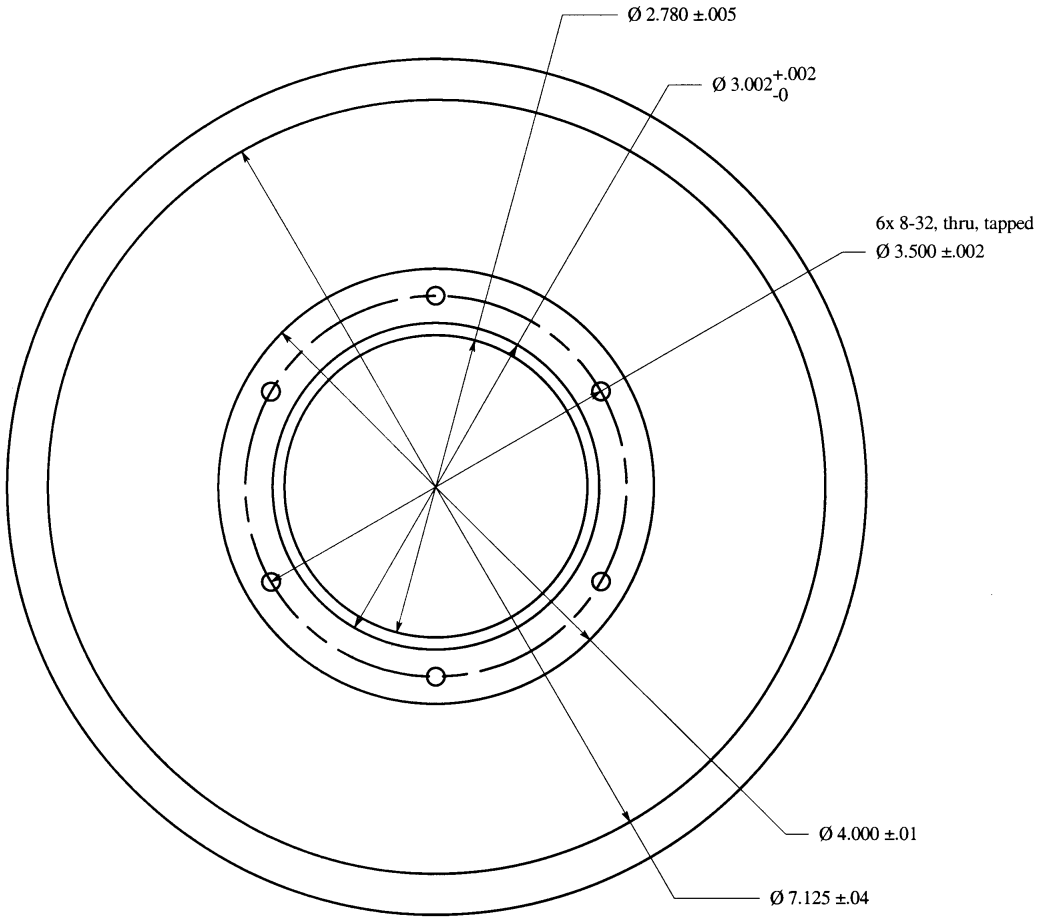

JET PROPULSION LABORATORY

CALIFORNIA INSTITUTE OF TECHNOLOGY
PASADENA, CALIFORNIA

DIMENSIONS ARE IN INCHES
UNLESS OTHERWISE SPECIFIED

TOLERANCES:

FRACTIONS	DECIMALS	ANGLES
1/32	.XX = 0.005 .XXX = 0.005 .XXXX = 0.001	0.1°

DRAWING TITLE:

ET Rover Wheel

PROJECT:		DWG NO.: XXXXXX-X
DRAWN: BRETT KENNEDY (818) 354-6444	DATE: 1/1/97	REV: 1
SCALE: None	MATERIAL: AL 7075-T6	QUANTITY: 34

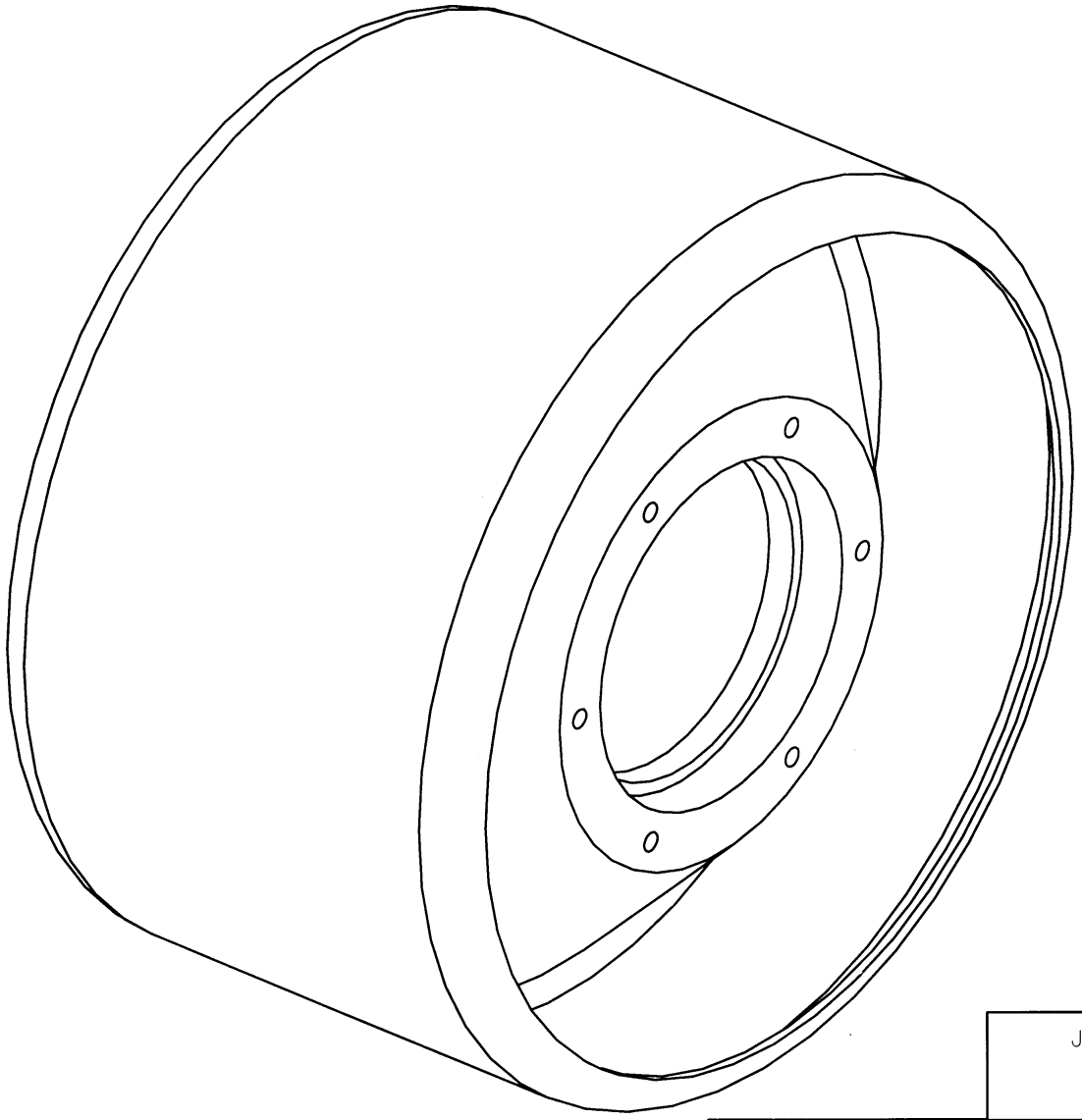

JET PROPULSION LABORATORY

CALIFORNIA INSTITUTE OF TECHNOLOGY
PASADENA, CALIFORNIA

DIMENSIONS ARE IN INCHES
UNLESS OTHERWISE SPECIFIED

TOLERANCES:

FRACTIONS	DECIMALS	ANGLES
1/32	.XX = 0.005 .XXX = 0.005 .XXXX = 0.001	0.1°

DRAWING TITLE:

ET Rover Wheel, Iso

PROJECT: ET Rover		DWG NO.: XXXXXX-X
DRAWN: BRETT KENNEDY (818) 354-6444	DATE: 4/29/98	REV: 1
SCALE: None	MATERIAL: AL 7075-T6	QUANTITY: 34

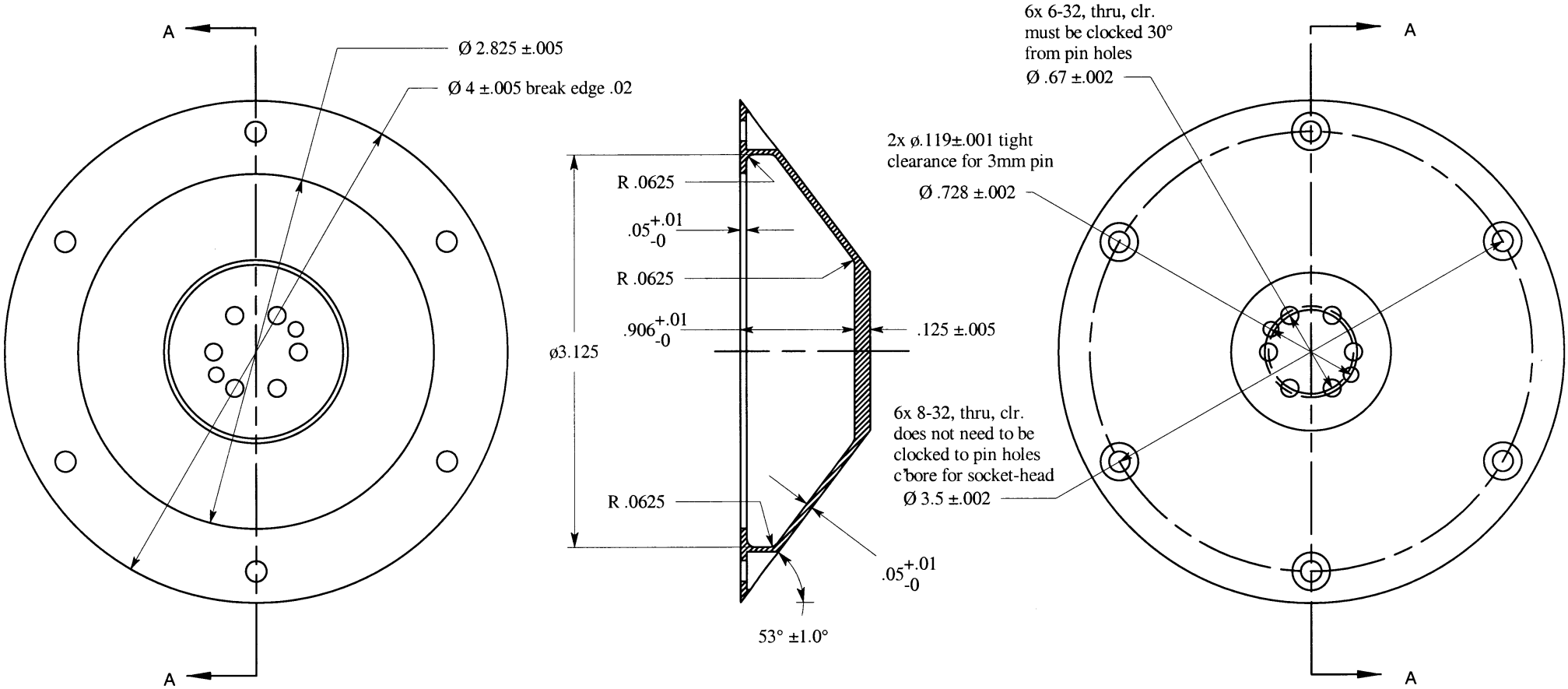

JET PROPULSION LABORATORY

CALIFORNIA INSTITUTE OF TECHNOLOGY
PASADENA, CALIFORNIA

DIMENSIONS ARE IN INCHES
UNLESS OTHERWISE SPECIFIED

TOLERANCES:

FRACTIONS	DECIMALS	ANGLES
1/32	.XX = 0.005 .XXX = 0.005 .XXXX = 0.001	0.1°

DRAWING TITLE: ET Rover Hubcap

PROJECT: ET Rover		DWG NO.: XXXXXX-X
DRAWN: BRETT KENNEDY (818) 354-6444	DATE: 4/29/97	REV: 1
SCALE: None	MATERIAL: AL 7075-T6	QUANTITY: 34

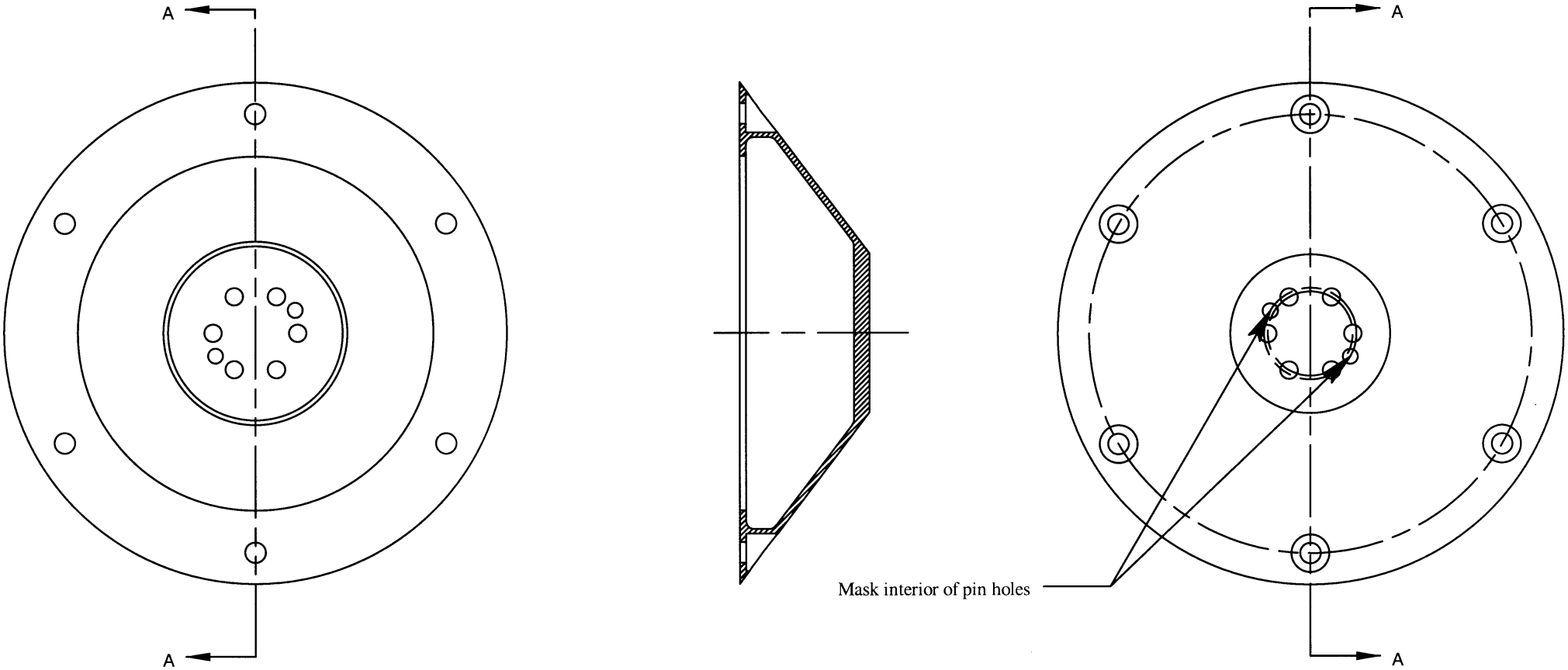

JET PROPULSION LABORATORY

CALIFORNIA INSTITUTE OF TECHNOLOGY
PASADENA, CALIFORNIA

DIMENSIONS ARE IN INCHES
UNLESS OTHERWISE SPECIFIED

TOLERANCES:

FRACTIONS	DECIMALS	ANGLES
1/32	.XX = 0.005 .XXX = 0.005 .XXXX = 0.001	0.1°

DRAWING TITLE: ET Rover Hubcap

PROJECT: ET Rover		DWG NO.: XXXXXX-X
DRAWN: BRETT KENNEDY (818) 354-6444	DATE: 4/29/97	REV: 1
SCALE: None	MATERIAL: AL 7075-T6	QUANTITY: 34

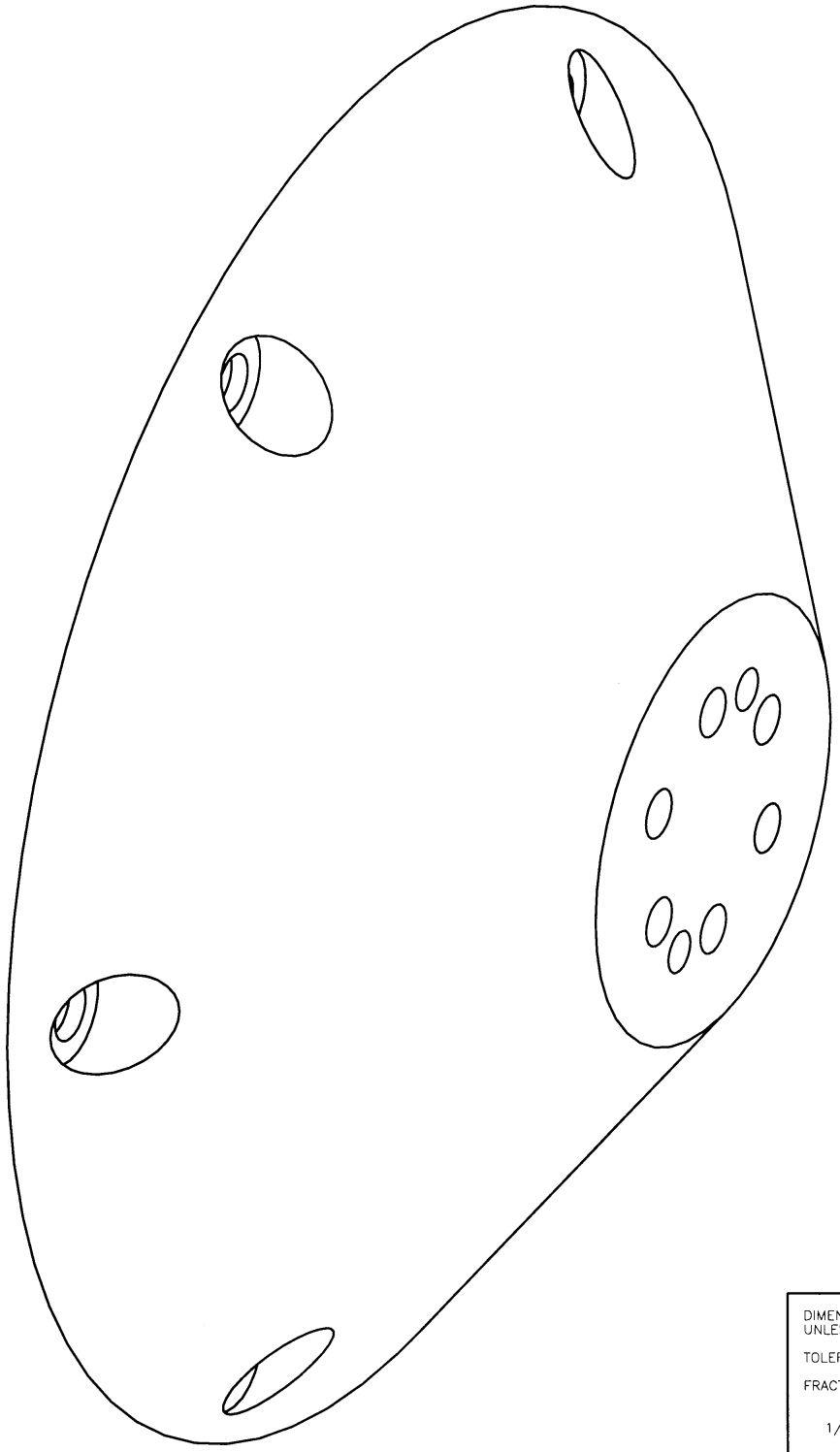

JET PROPULSION LABORATORY

CALIFORNIA INSTITUTE OF TECHNOLOGY
PASADENA, CALIFORNIA

DIMENSIONS ARE IN INCHES
UNLESS OTHERWISE SPECIFIED

TOLERANCES:

FRACTIONS	DECIMALS	ANGLES
1/32	.XX = 0.005 .XXX = 0.005 .XXXX = 0.001	0.1°

DRAWING TITLE:

ET Rover Hubcap, Iso

PROJECT:		DWG NO.: XXXXXX-X	
DRAWN: BRETT KENNEDY (818) 354-6444		DATE: 1/1/97	REV:
SCALE: None	MATERIAL: AL 7075-T6		QUANTITY: