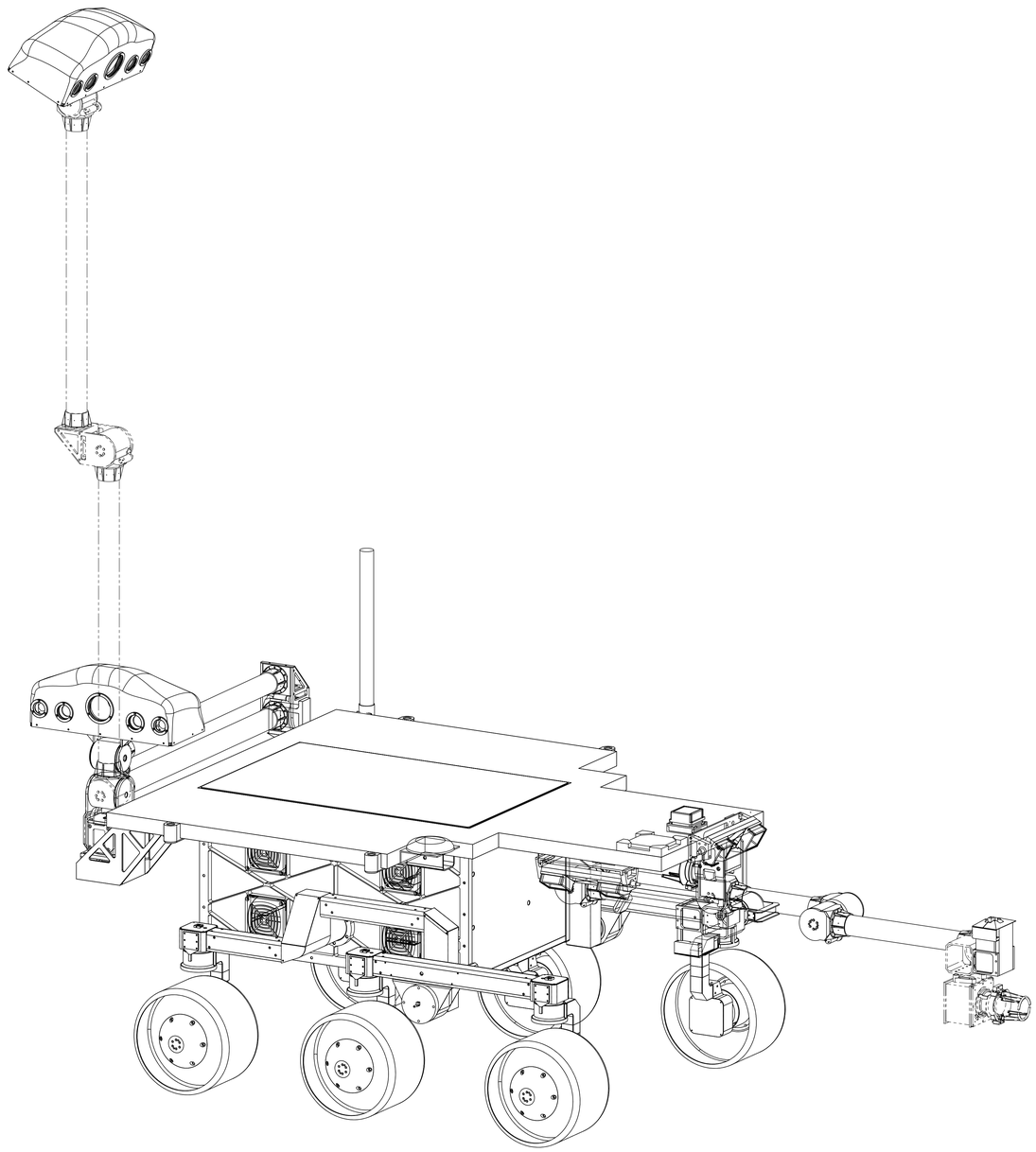

REVISIONS

LTR	ZONE	DESCRIPTION	CODE	DWN	CHK	STRUCT	MATL	THRM CONT		ENGR	DSGN SUPV	DATA MGT	RELEASE DATE
A		INITIAL RELEASE	E	SEE TITLE BLOCK									

PARTS LIST

QTY REQD	
NEXT ASSEMBLY	USED ON
APPLICATION	

UNLESS OTHERWISE SPECIFIED
DIMENSIONS ARE IN INCHES
TOLERANCES
DECIMALS XX ± .03 XXX ± .010
ANGLES ± 1/2°
MACHINE FINISH
DO NOT SCALE DRAWING
INTERPRET DWG PER ASME Y14.100M
MATERIAL

CONTRACT NO

	APPD	DATE
DWN	T. GANINO	8/21/03
CHK		
STRUCT		
MATL		
THRM CONT		
ENGR		
DSGN SUPV		

JET PROPULSION LABORATORY
CALIFORNIA INSTITUTE OF TECHNOLOGY
PASADENA, CA 91109

RELEASED THROUGH EDMG

PROPERTIES DESCRIPTION, FIDO ROVER

SIZE	CAGE NO		REV
E	23835	10237471	A
SCALE 1:4	UNCLASSIFIED	SHEET 1 OF 3	

REV 5/01

SolidWorks GENERATED

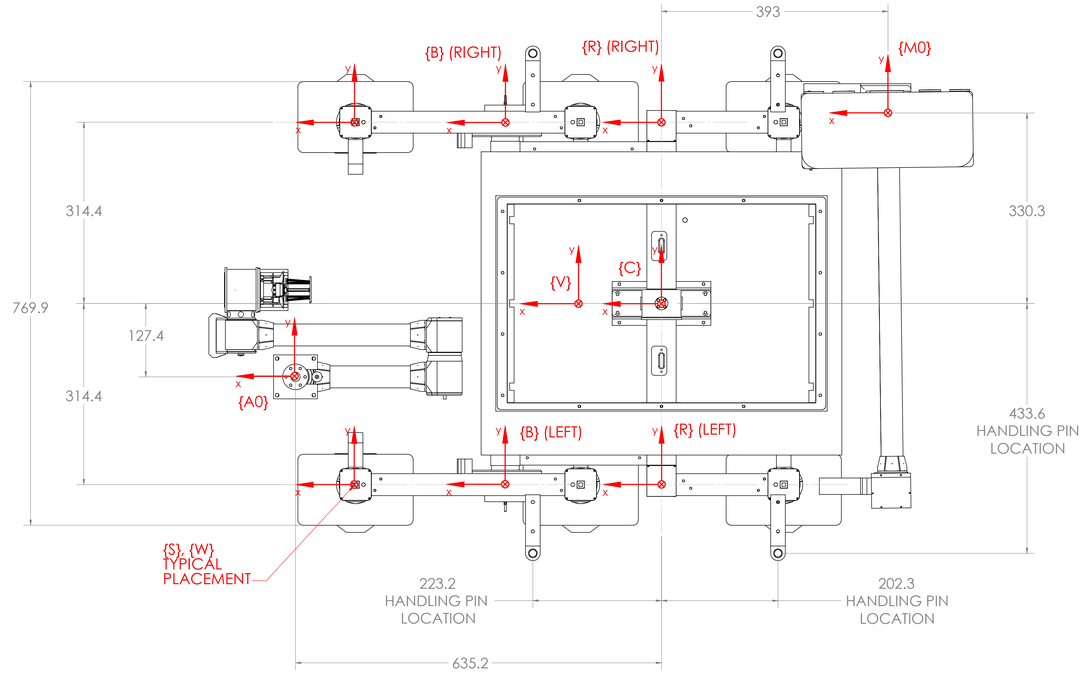

TOP VIEW
STRONGBACK REMOVED FOR CLARITY

REFERENCE COORDINATE FRAME CONVENTIONS:

{V} - VEHICLE, OVERALL
{C} - CHASSIS
{R} - ROCKER (EITHER RIGHT OR LEFT)
{B} - BOGIE (RIGHT OR LEFT)
{S} - STEERING (NO SPECIFIC POSITION)
{W} - WHEEL (NO SPECIFIC POSITION)
{A<i>} - ARM, SEGMENT i
{M<i>} - MAST, SEGMENT i
{T<i>} - TOOL, SEGMENT i (EITHER MAST OR ARM)

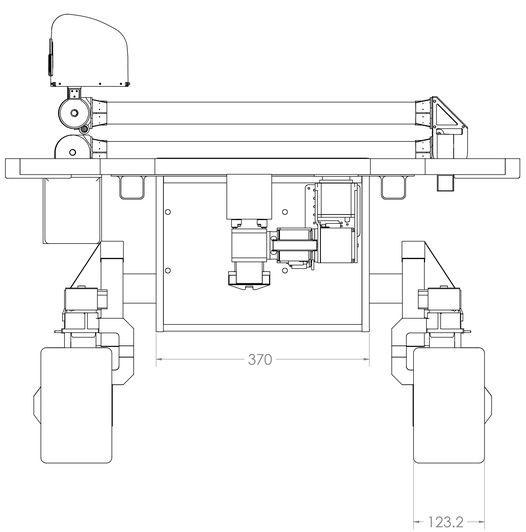

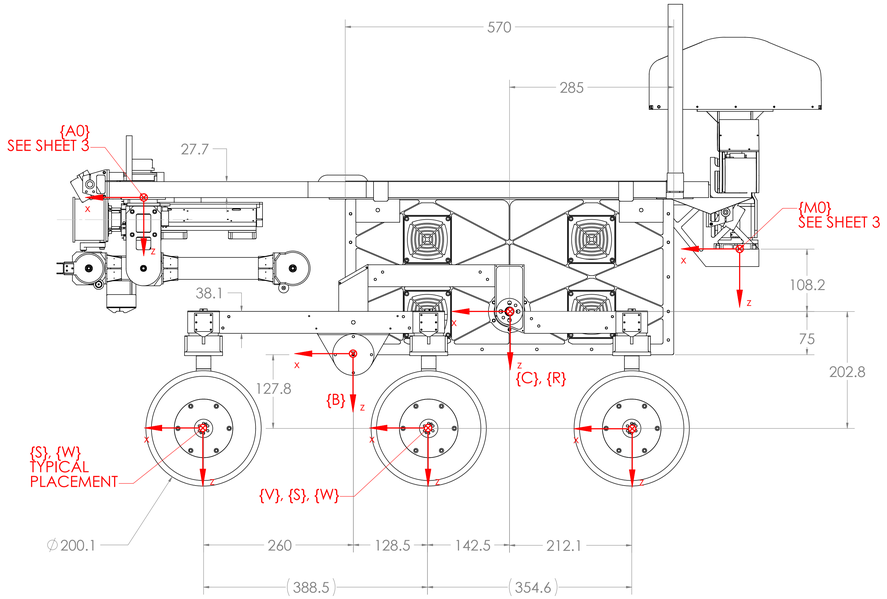

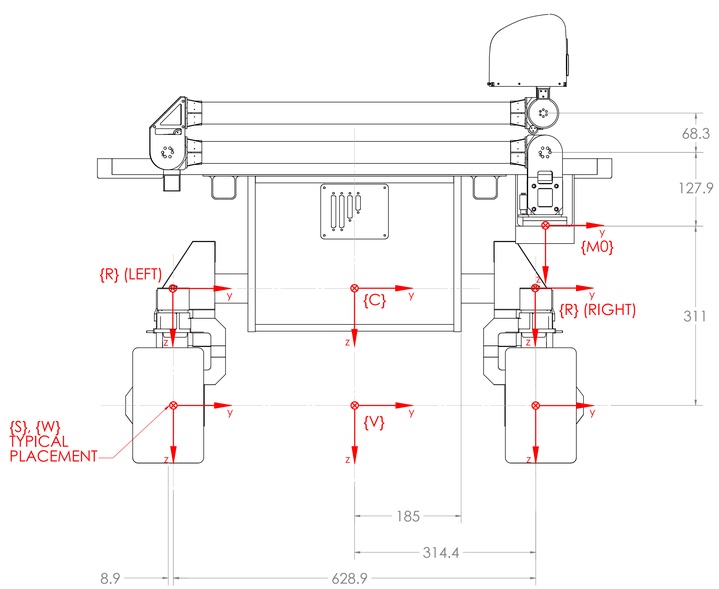

SIZE	CAGE NO		REV
E	23835	10237471	A
SCALE 1:4	UNCLASSIFIED	SHEET 2 OF 3	

REV 5/01

SolidWorks GENERATED

MAST DETAIL
ALL JOINTS AT 0° POSITION
ROVER REMOVED FOR CLARITY

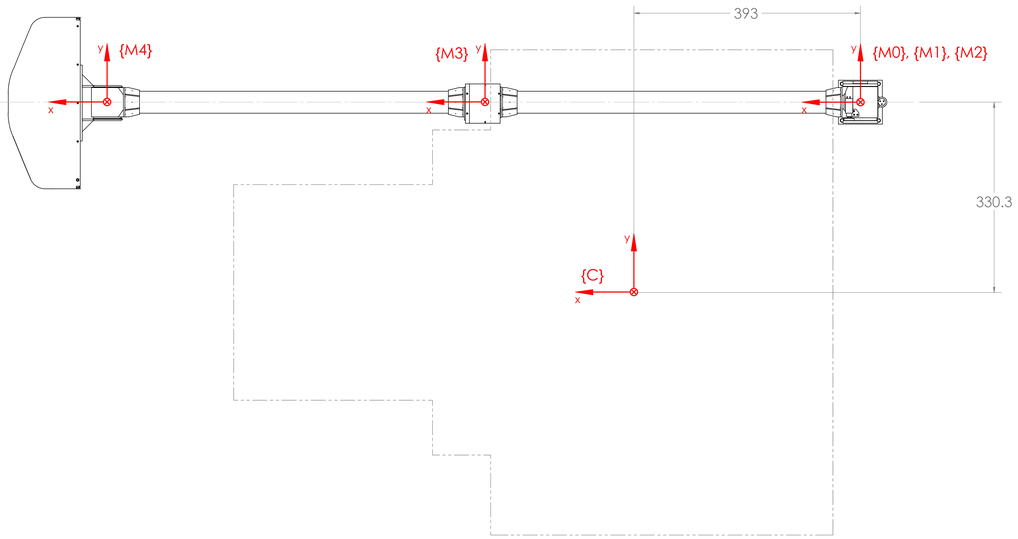

TOP VIEW

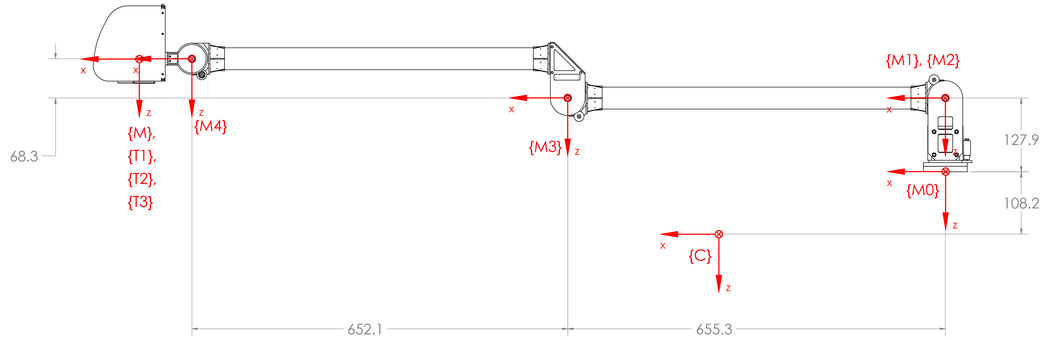

RIGHT VIEW

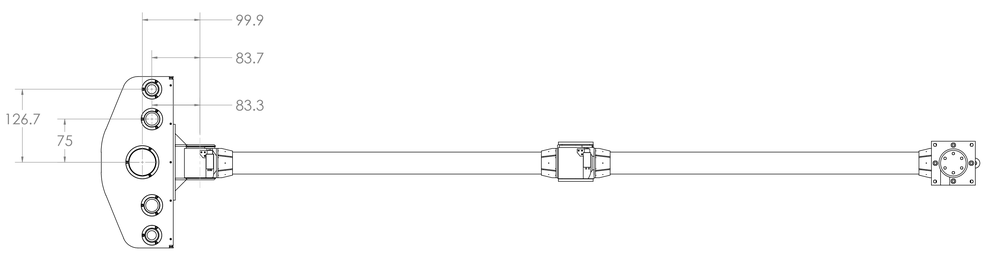

INSTRUMENT ARM DETAIL
ALL JOINTS AT 0° POSITION
ROVER REMOVED FOR CLARITY

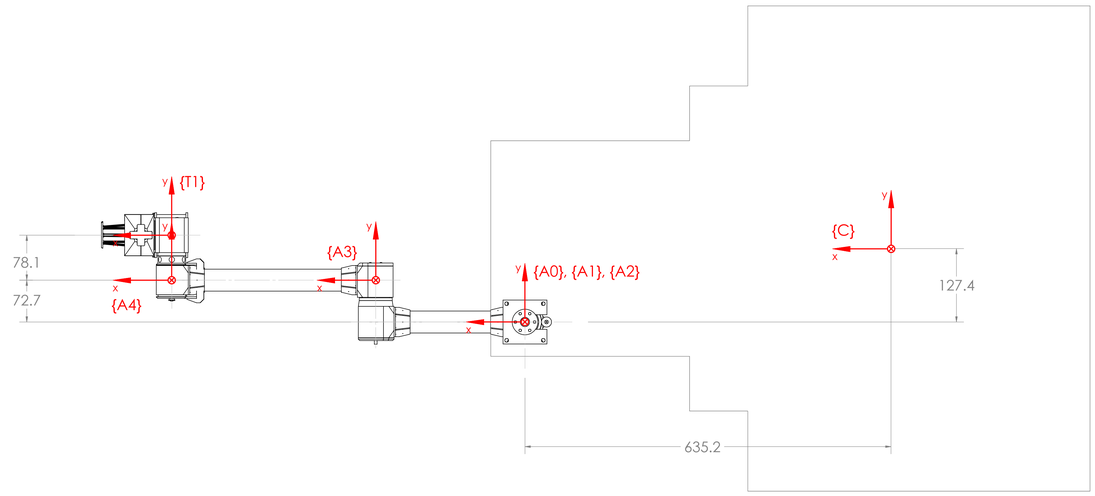

TOP VIEW

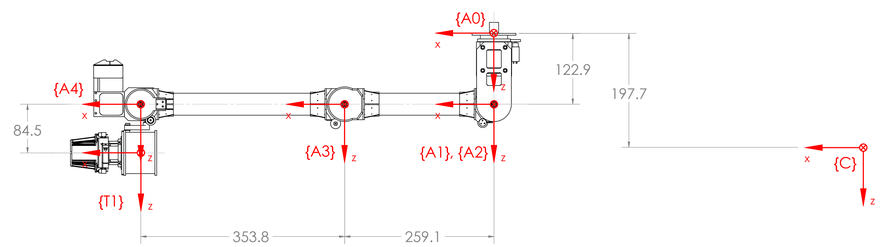

RIGHT VIEW

SIZE	CAGE NO		REV
E	23835	10237471	A
SCALE 1:4	UNCLASSIFIED	SHEET 3 OF 3	

REV 5/01

SolidWorks GENERATED