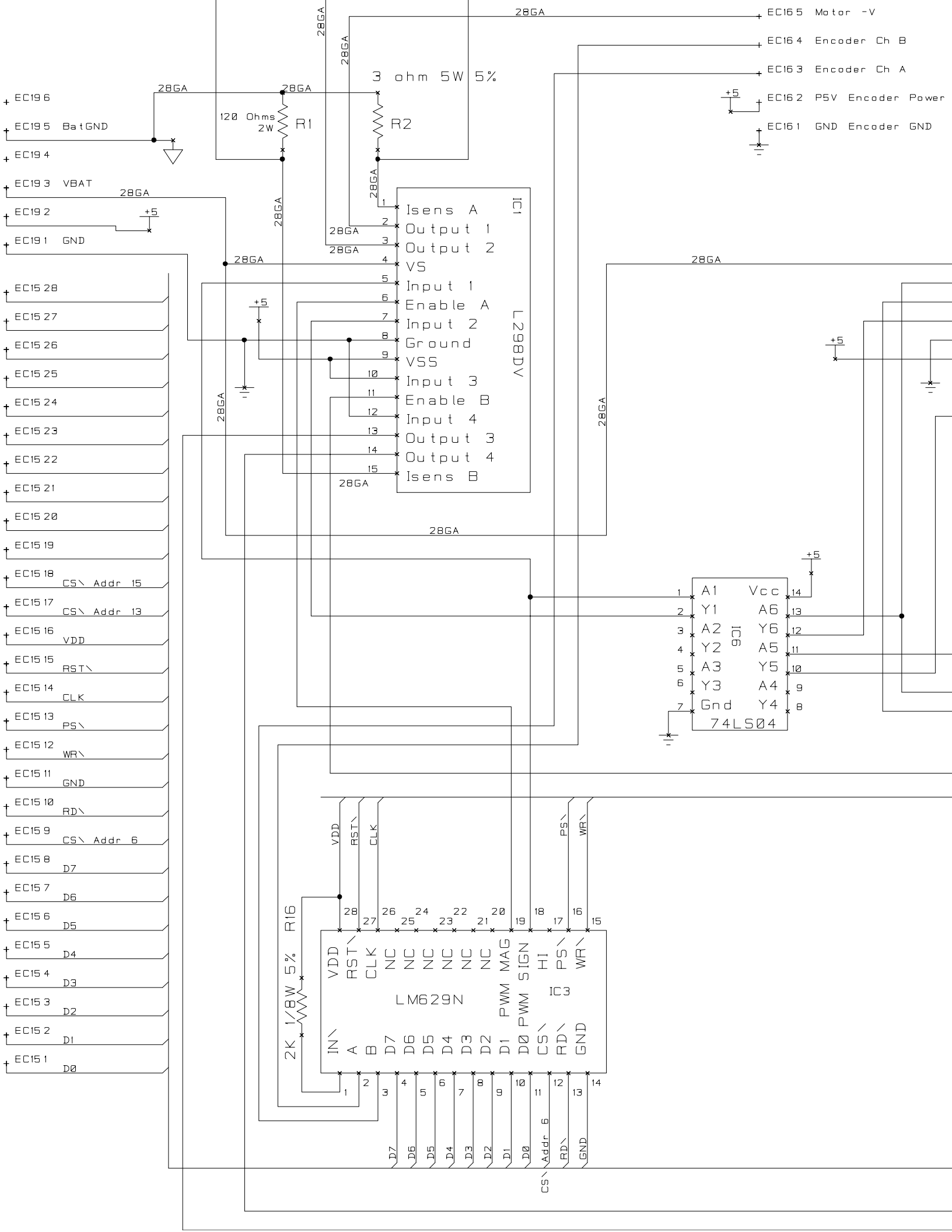
EC165 Motor -V
EC164 Encoder Ch B
EC163 Encoder Ch A
EC162 P5V Encoder Power
EC161 GND Encoder GND
3 ohm 5W 5%
R2
120 Ohms 2W
R1
EC196
EC195 BatGND
EC194
EC193 VBAT
EC192
EC191 GND
IC1
Isens A
Output 1
Output 2
VS
Input 1
Enable A
Input 2
Ground
VSS
Input 3
Enable B
Input 4
Output 3
Output 4
Isens B
L298DV
EC1528
EC1527
EC1526
EC1525
EC1524
EC1523
EC1522
EC1521
EC1520
EC1519
EC1518 CS\ Addr 15
EC1517 CS\ Addr 13
EC1516 VDD
EC1515 RST\
EC1514 CLK
EC1513 PS\
EC1512 WR\
EC1511 GND
EC1510 RD\
EC159 CS\ Addr 6
EC158 D7
EC157 D6
EC156 D5
EC155 D4
EC154 D3
EC153 D2
EC152 D1
EC151 D0
IC6
A1 Y1 A2 Y2 A3 Y3 Gnd
Vcc A6 Y6 A5 Y5 A4 Y4
74LS04
R16
2K 1/8W 5%
LM629N
IC3
VDD RST\ CLK NC NC NC NC NC NC MAG SIGN HI PS\ WR\
IN\ A B D7 D6 D5 D4 D3 D2 D1 D0 PWM PWM CS\ RD\ GND
28GA
+5

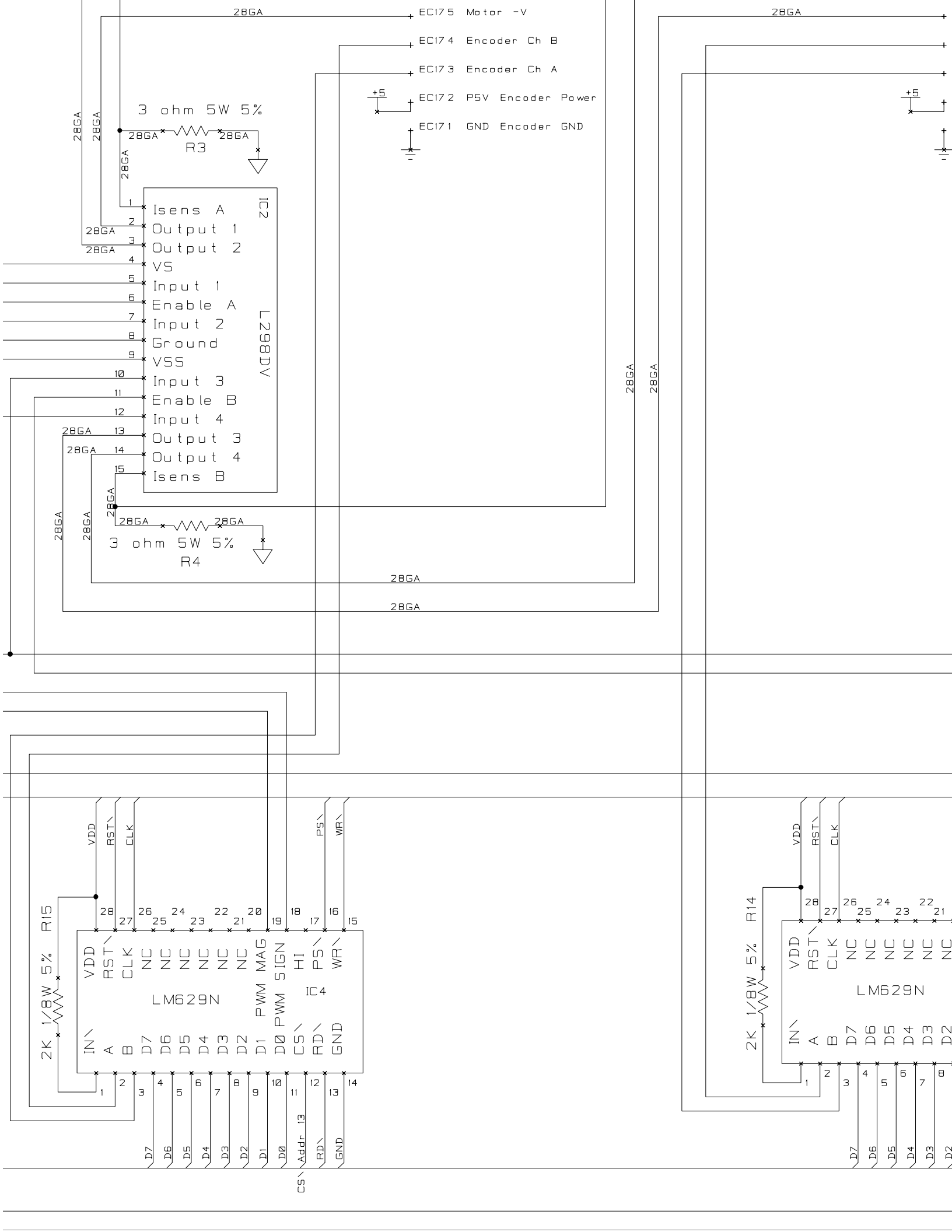
EC175 Motor -V
EC174 Encoder Ch B
EC173 Encoder Ch A
EC172 P5V Encoder Power
EC171 GND Encoder GND
+5
28GA
3 ohm 5W 5%
R3
R4
IC2
L298DV
Isens A
Output 1
Output 2
VS
Input 1
Enable A
Input 2
Ground
VSS
Input 3
Enable B
Input 4
Output 3
Output 4
Isens B
R15
R14
2K 1/8W 5%
LM629N
IC4
VDD
RST\
CLK
NC
MAG
SIGN
HI
PS\
WR\
PWM
IN\
A
B
D7
D6
D5
D4
D3
D2
D1
D0
CS\
RD\
GND
Addr 13

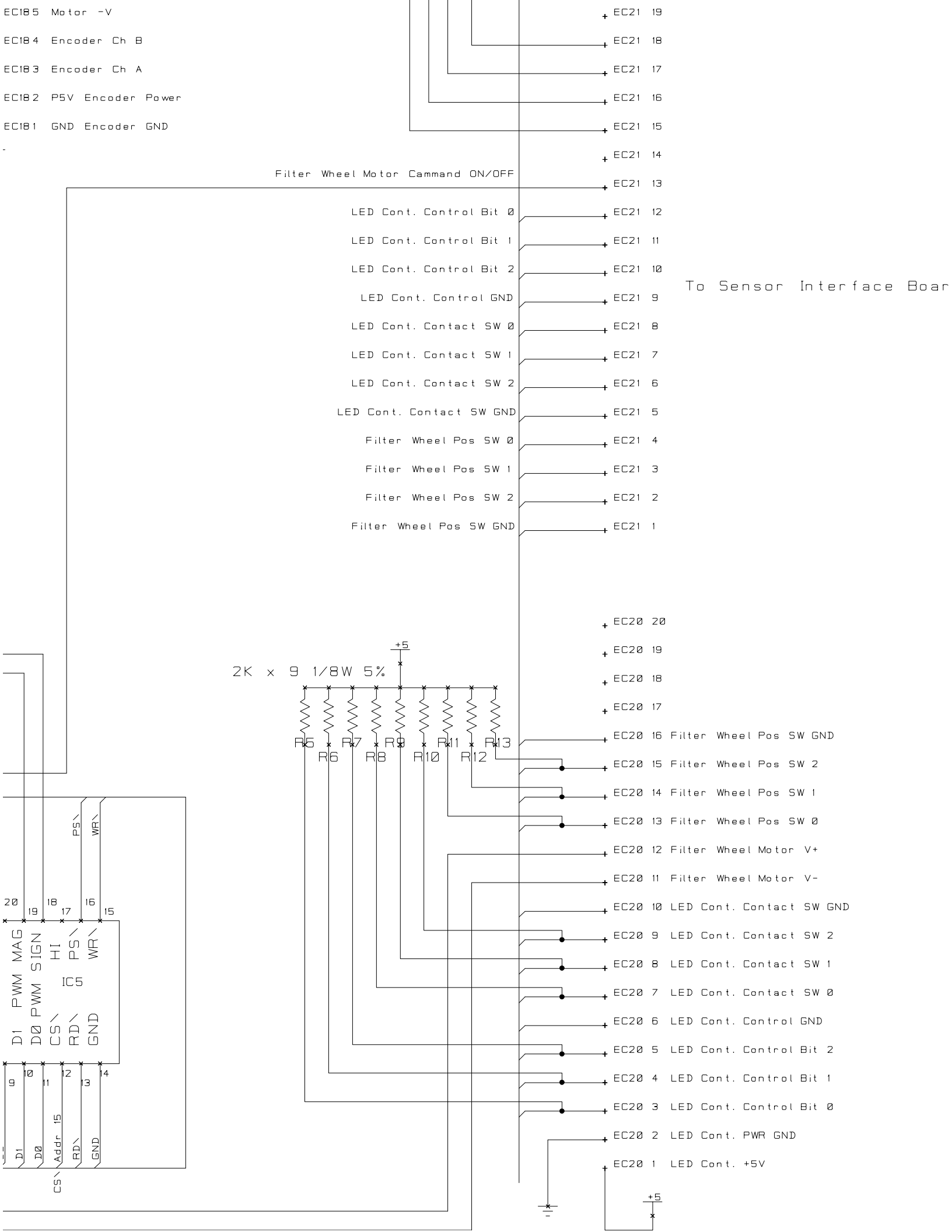
EC185 Motor -V
EC184 Encoder Ch B
EC183 Encoder Ch A
EC182 P5V Encoder Power
EC181 GND Encoder GND
Filter Wheel Motor Cammand ON/OFF
LED Cont. Control Bit 0
LED Cont. Control Bit 1
LED Cont. Control Bit 2
LED Cont. Control GND
LED Cont. Contact SW 0
LED Cont. Contact SW 1
LED Cont. Contact SW 2
LED Cont. Contact SW GND
Filter Wheel Pos SW 0
Filter Wheel Pos SW 1
Filter Wheel Pos SW 2
Filter Wheel Pos SW GND
EC21 19
EC21 18
EC21 17
EC21 16
EC21 15
EC21 14
EC21 13
EC21 12
EC21 11
EC21 10
EC21 9
EC21 8
EC21 7
EC21 6
EC21 5
EC21 4
EC21 3
EC21 2
EC21 1
To Sensor Interface Boar
EC20 20
EC20 19
EC20 18
EC20 17
EC20 16 Filter Wheel Pos SW GND
EC20 15 Filter Wheel Pos SW 2
EC20 14 Filter Wheel Pos SW 1
EC20 13 Filter Wheel Pos SW 0
EC20 12 Filter Wheel Motor V+
EC20 11 Filter Wheel Motor V-
EC20 10 LED Cont. Contact SW GND
EC20 9 LED Cont. Contact SW 2
EC20 8 LED Cont. Contact SW 1
EC20 7 LED Cont. Contact SW 0
EC20 6 LED Cont. Control GND
EC20 5 LED Cont. Control Bit 2
EC20 4 LED Cont. Control Bit 1
EC20 3 LED Cont. Control Bit 0
EC20 2 LED Cont. PWR GND
EC20 1 LED Cont. +5V
+5
2K x 9 1/8W 5%
R5 R6 R7 R8 R9 R10 R11 R12 R13
IC5
D1 PWM MAG
D0 PWM SIGN
CS/ HI
RD/ PS/
GND WR/
Addr 15
CS/

d EC???

28GA

EC166 Motor +V

Mast Interface Board

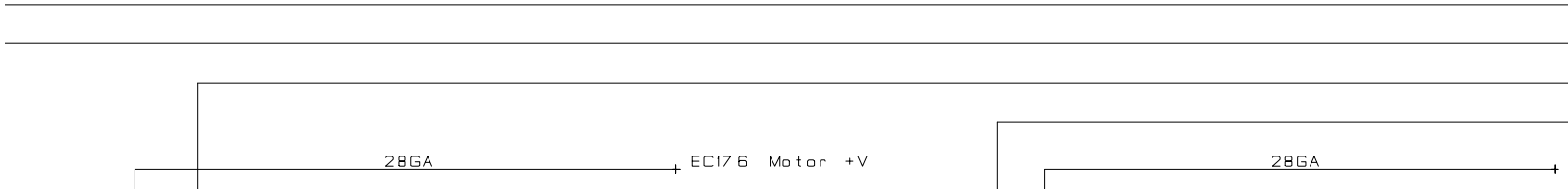

Current Sense 1

Current Sense 2

Current Sense 3

Current Sense 4

EC186 Motor +V

+ EC21 20