Rocky VII Battery/Charger Wiring

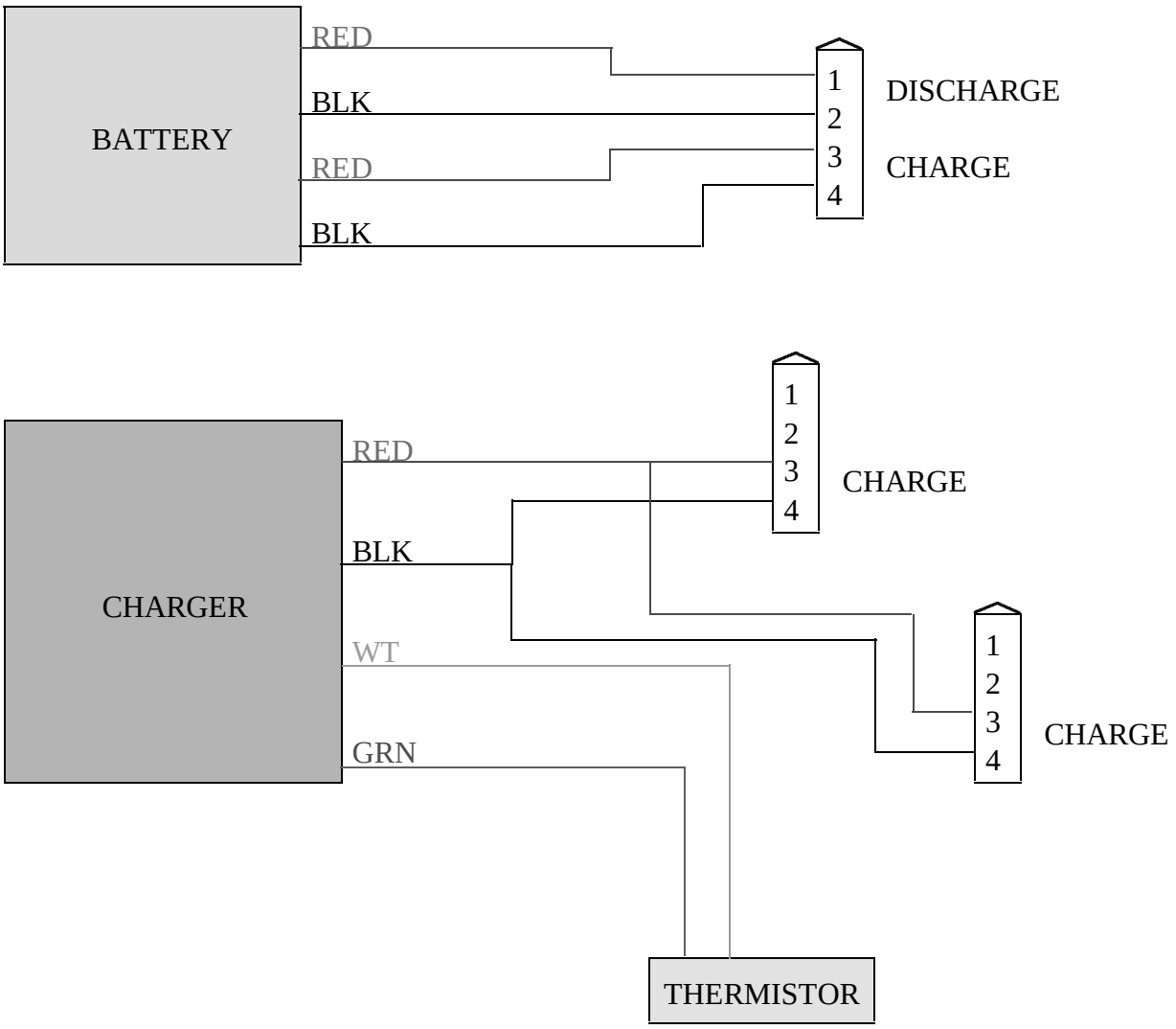

Robert V. Ivlev
7-28-95