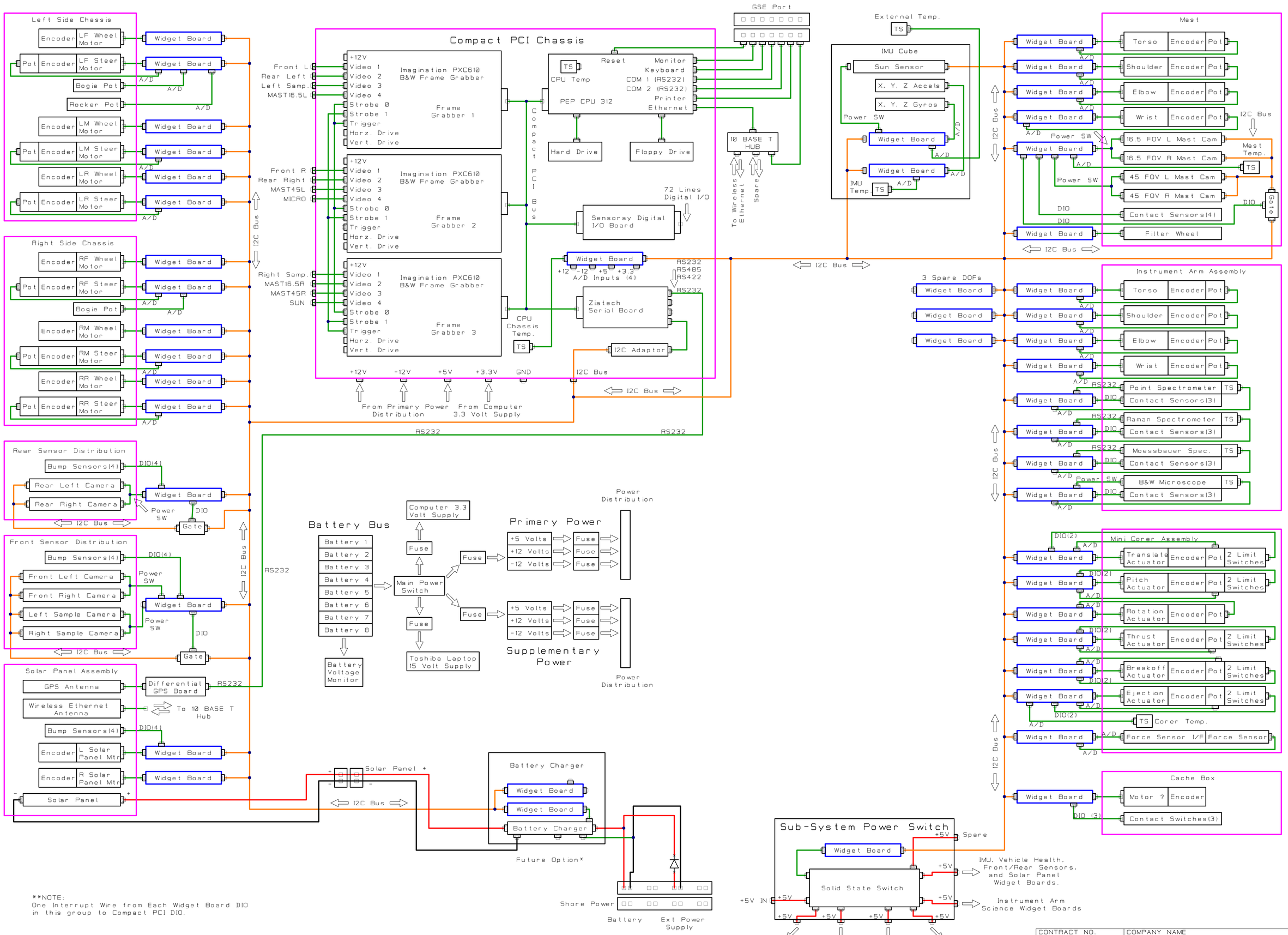

CONTRACT NO.		COMPANY NAME: Jet Propulsion Laboratory		
APPROVALS	DATE	DWG: Rocky VIII Electronics Block Diagram		
Drawn R. Ivlev	3-03-99	SIZE C	FSCM NO.	DWG NO.	REV A
Engineer R. Ivlev	1-28-99			
ISSUED		SCALE		SHEET