DWG. NO.	SH	REV.

REVISIONS

ZONE	REV	DESCRIPTION	DATE	APPROVED

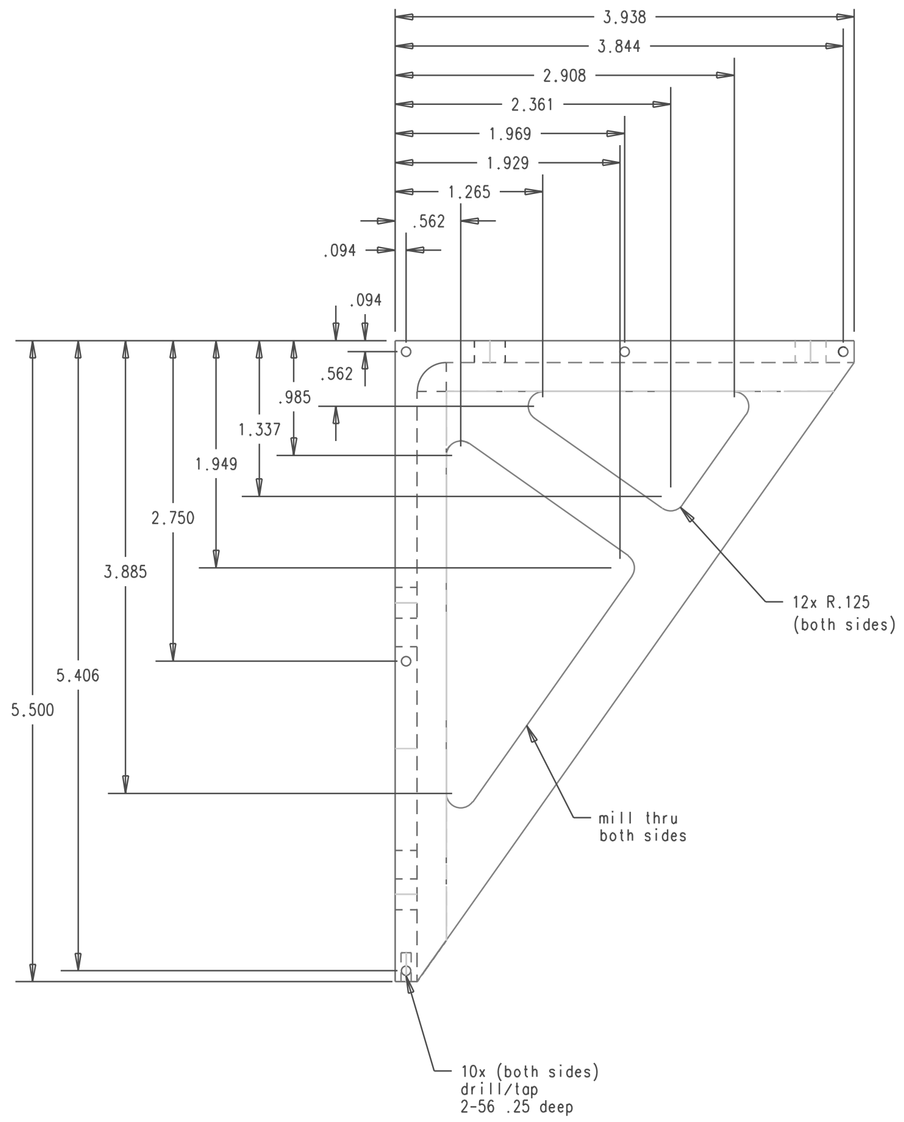

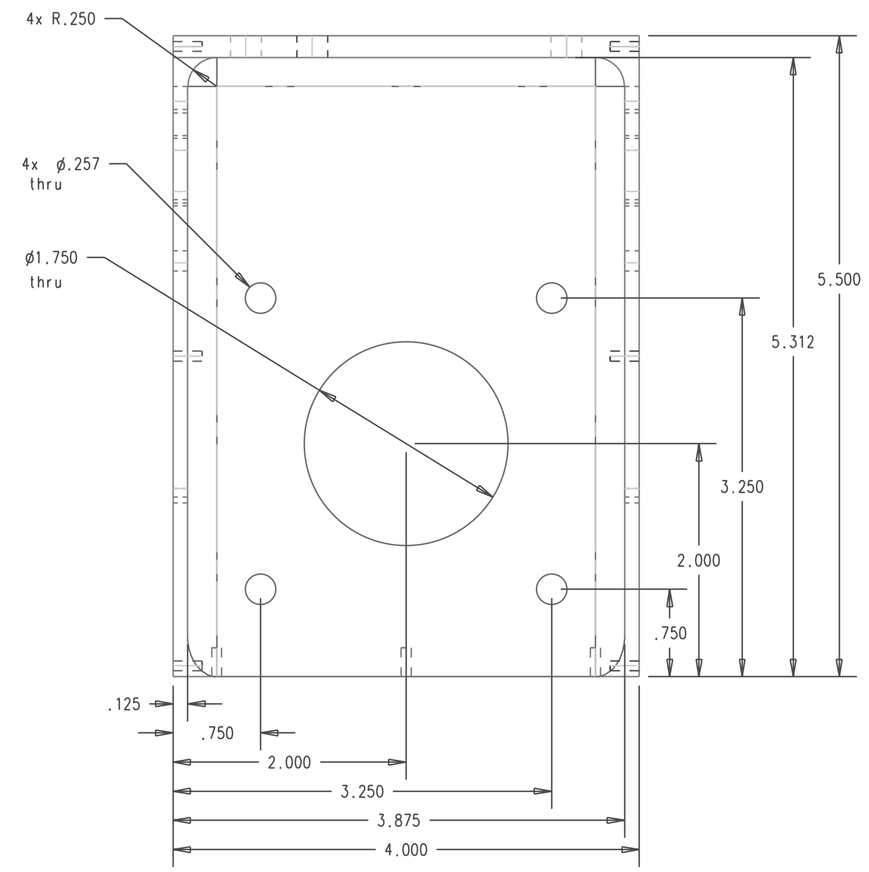

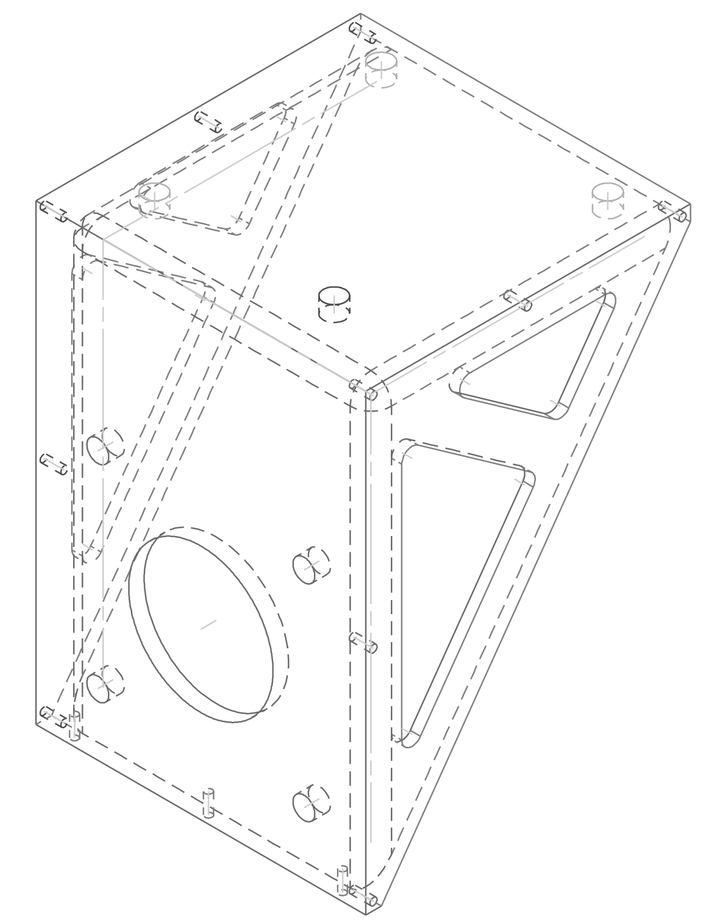

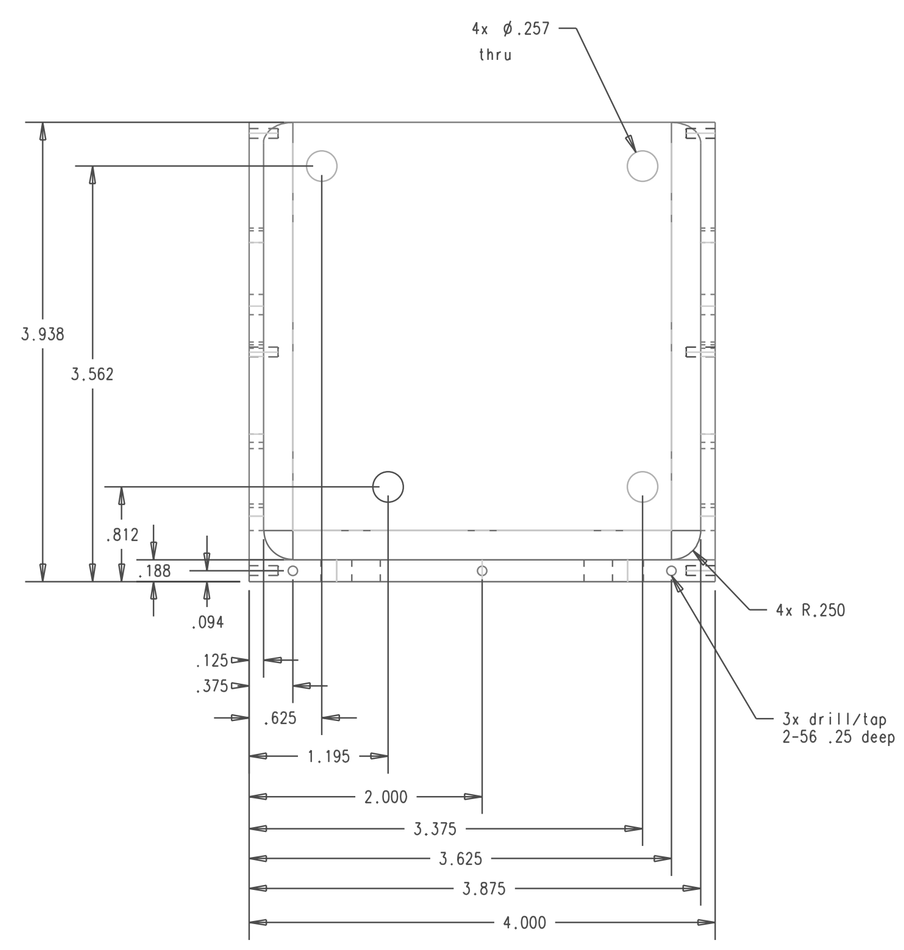

4-VIEW3

QTY REQD	FSCM NO	PART OR IDENTIFYING NO	NOMENCLATURE OR DESCRIPTION	MATERIAL SPCIFICATION	ZONE	ITEM NO
1			PARTS LIST	7075 AL		

UNLESS OTHERWISE SPECIFIED DIMENSIONS ARE IN INCHES
TOLERANCES ARE:
FRACTIONS ± DECIMALS .XX± .XXX+/-.005 ANGLES ±
DO NOT SCALE DRAWING

TREATMENT

FINISH
black anodize

SIMILAR TO | ACT. WT | CALC WT

CONTRACT NO.

APPROVALS	DATE
DRAWN	9/27/99
CHECKED	
ISSUED	

Dan Helmick (4-3226)
Emp. No. 111739

TITLE
Arm Mount

SIZE D | FSCM NO.

SCALE 1:1 | SHEET