DWG. NO.	SH	REV.

REVISIONS

ZONE	REV	DESCRIPTION	DATE	APPROVED

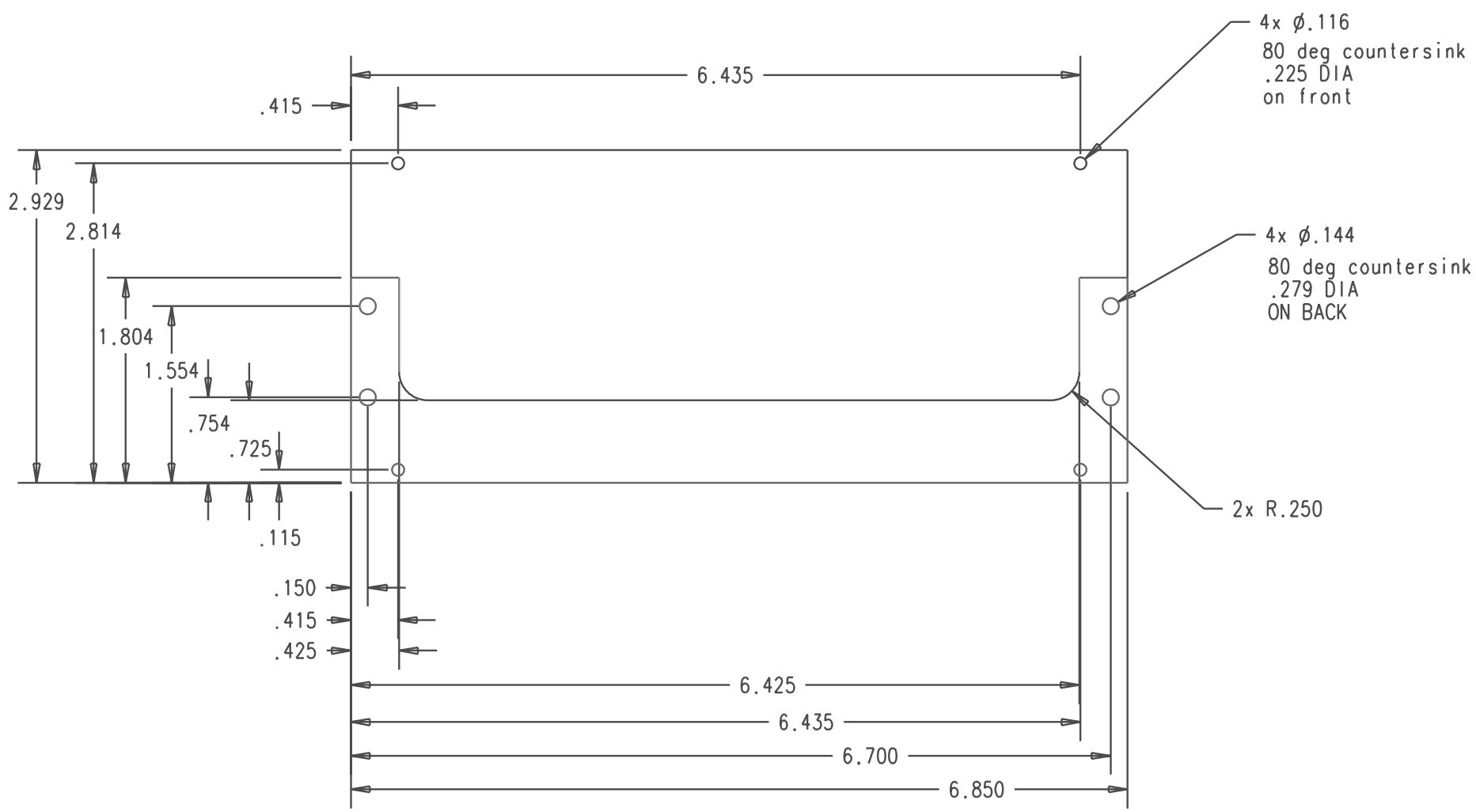

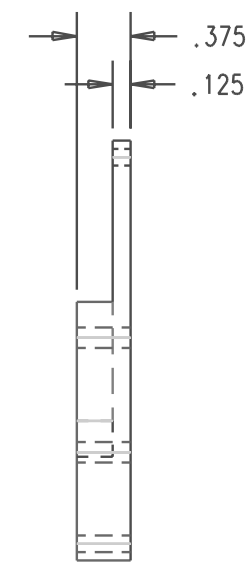

QTY REQD	FSCM NO	PART OR IDENTIFYING NO	NOMENCLATURE OR DESCRIPTION	MATERIAL SPECIFICATION	ITEM NO
2			PARTS LIST	7075 AL	

UNLESS OTHERWISE SPECIFIED
DIMENSIONS ARE IN INCHES
TOLERANCES ARE:
FRACTIONS ± DECIMALS .XX= .XXX= +/-.005 ± ANGLES ±
DO NOT SCALE DRAWING

TREATMENT

FINISH gold anodize

SIMILAR TO | ACT. WT | CALC WT

CONTRACT NO. 100102-7SS70

APPROVALS	DATE
DRAWN	8/13/99
CHECKED	
ISSUED	

Dan Helmick (4-3226)
Emp. No. 111739

TITLE Chassis Camera Box Lid - Cut

SIZE B | FSCM NO. | DWG NO.

SCALE 1:1 | SHEET