DWG. NO.	SH	REV.

REVISIONS

ZONE	REV	DESCRIPTION	DATE	APPROVED

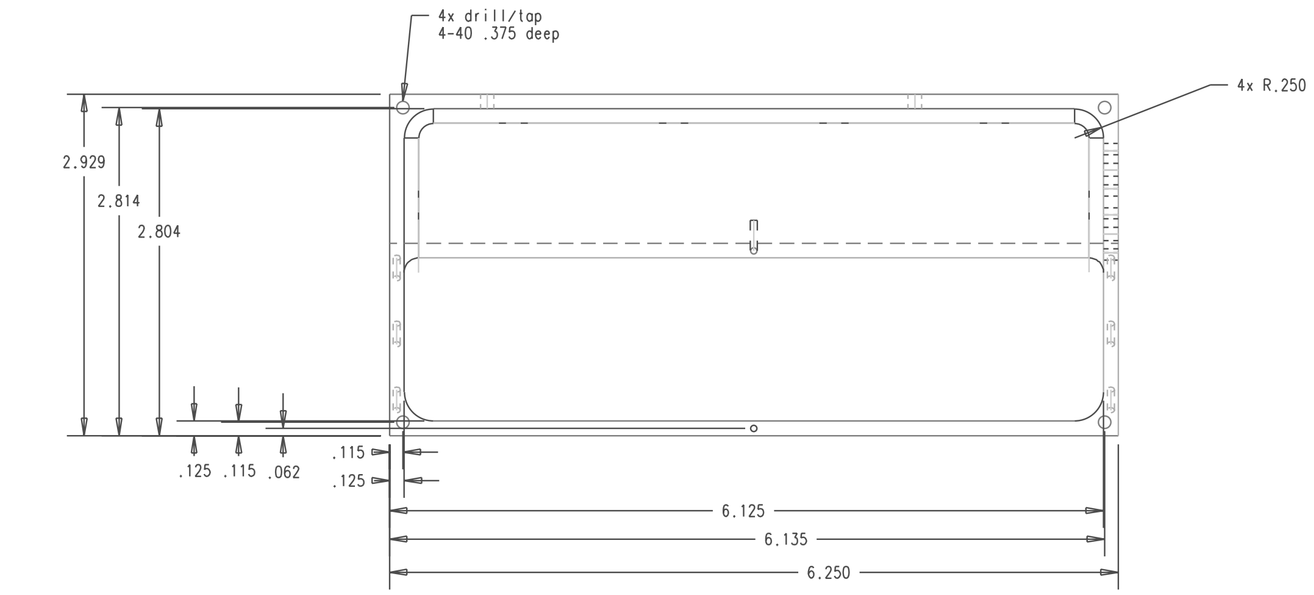

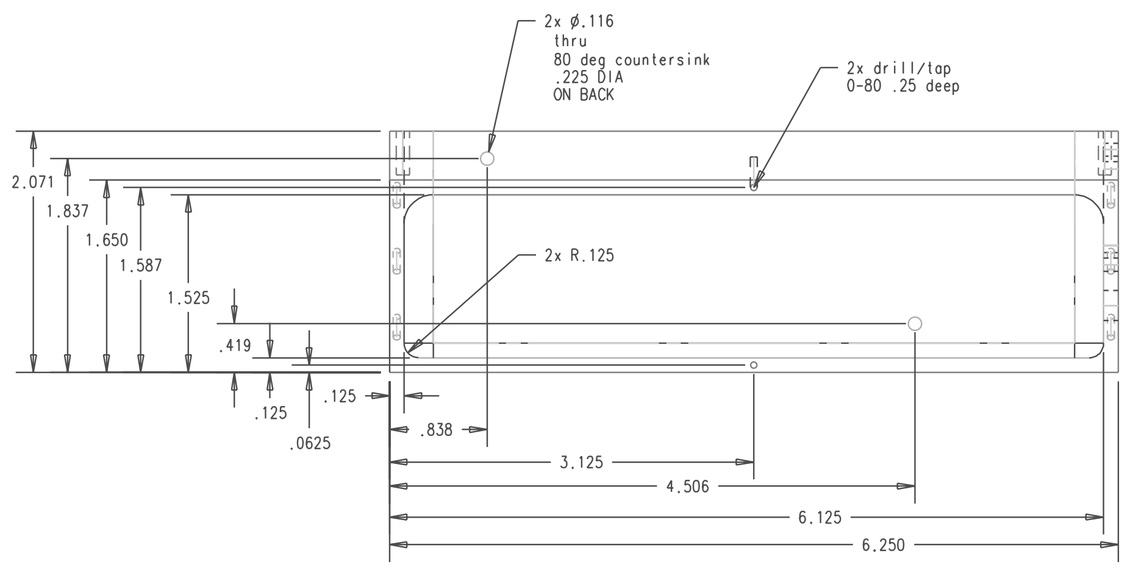

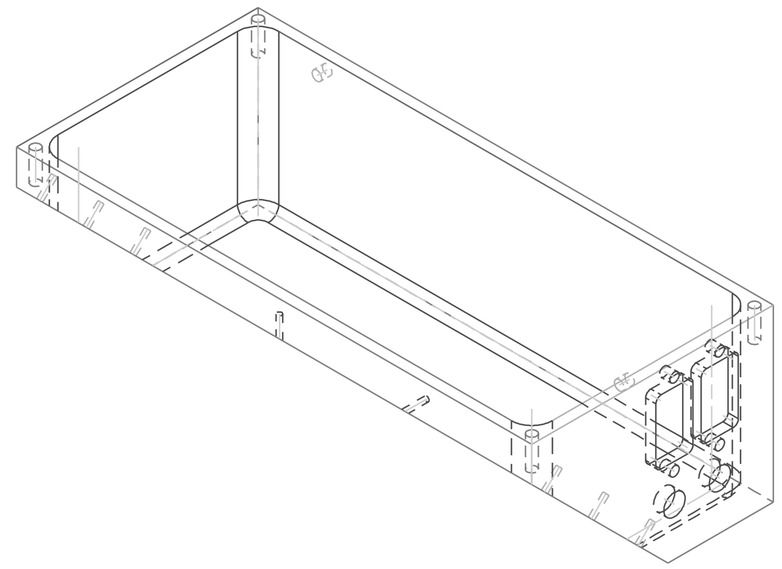

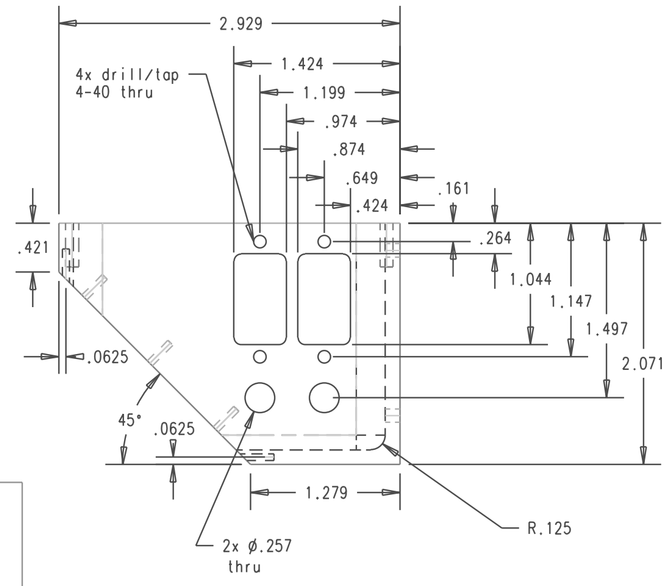

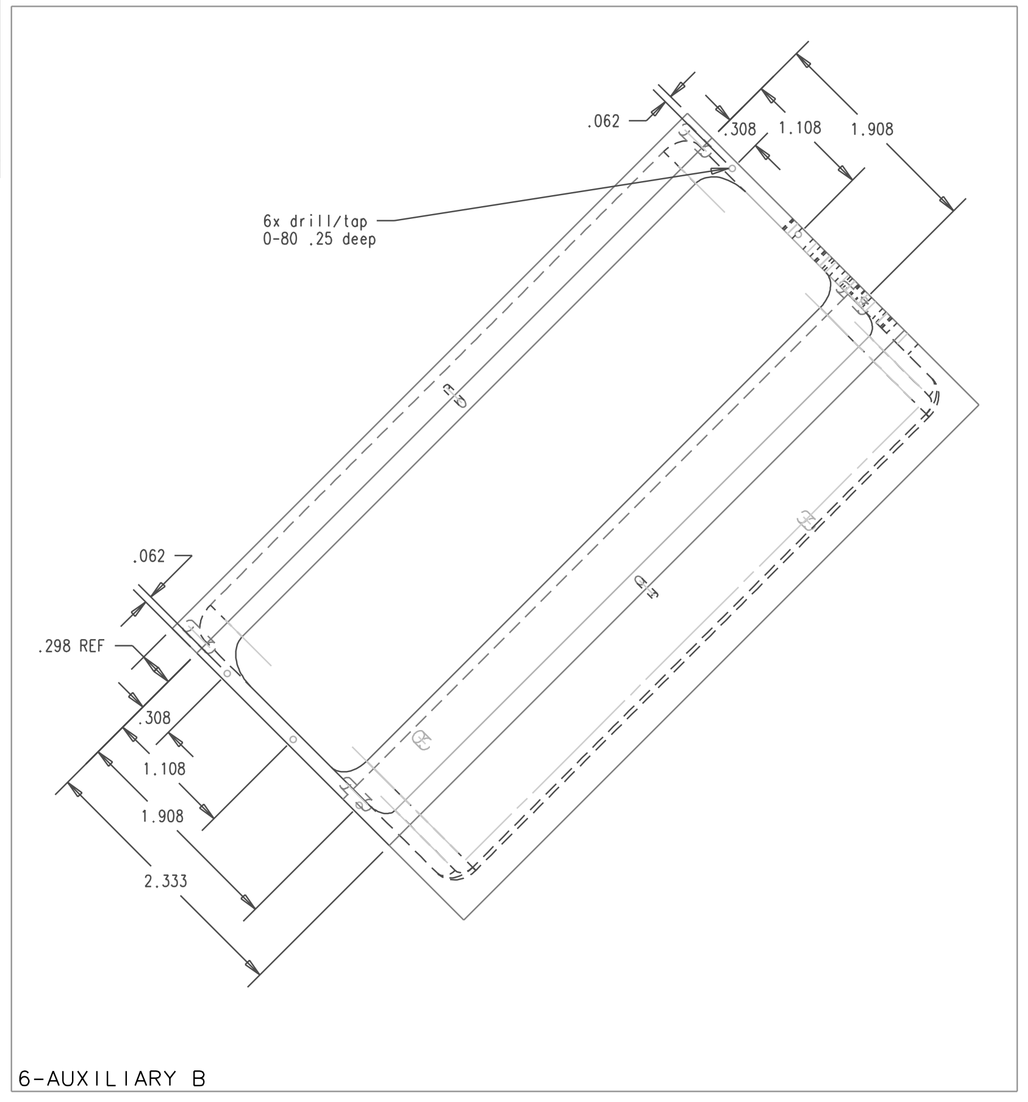

6-AUXILIARY B

QTY REQD	FSCM NO	PART OR IDENTIFYING NO	NOMENCLATURE OR DESCRIPTION	MATERIAL SPCIFICATION	ZONE	ITEM NO
3			PARTS LIST	7075 AL		

UNLESS OTHERWISE SPECIFIED
DIMENSIONS ARE IN INCHES
TOLERANCES ARE:
FRACTIONS ± DECIMALS .XX= .XXX= +/-.005 ANGLES ± 1
DO NOT SCALE DRAWING

CONTRACT NO. 100102-7SS70

Dan Helmick (4-3226)
Emp. No. 111739

APPROVALS	DATE
DRAWN	8/12/99
CHECKED	
ISSUED	

TREATMENT

FINISH

SIMILAR TO | ACT. WT | CALC WT

TITLE
Chassis Camera Main Box

SIZE D | FSCM NO.

SCALE 1:1 | SHEET