DWG. NO.	SH	REV.

REVISIONS

ZONE	REV	DESCRIPTION	DATE	APPROVED

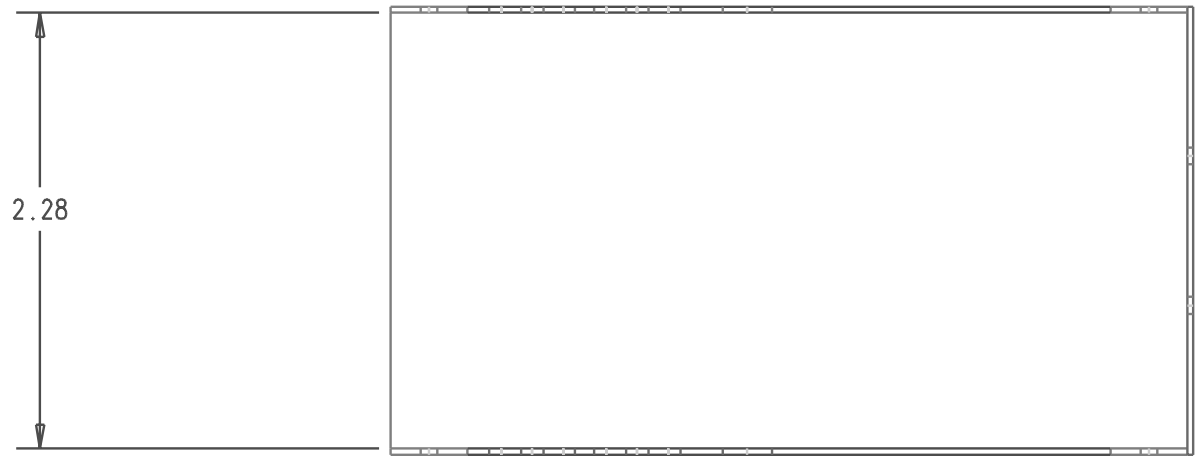

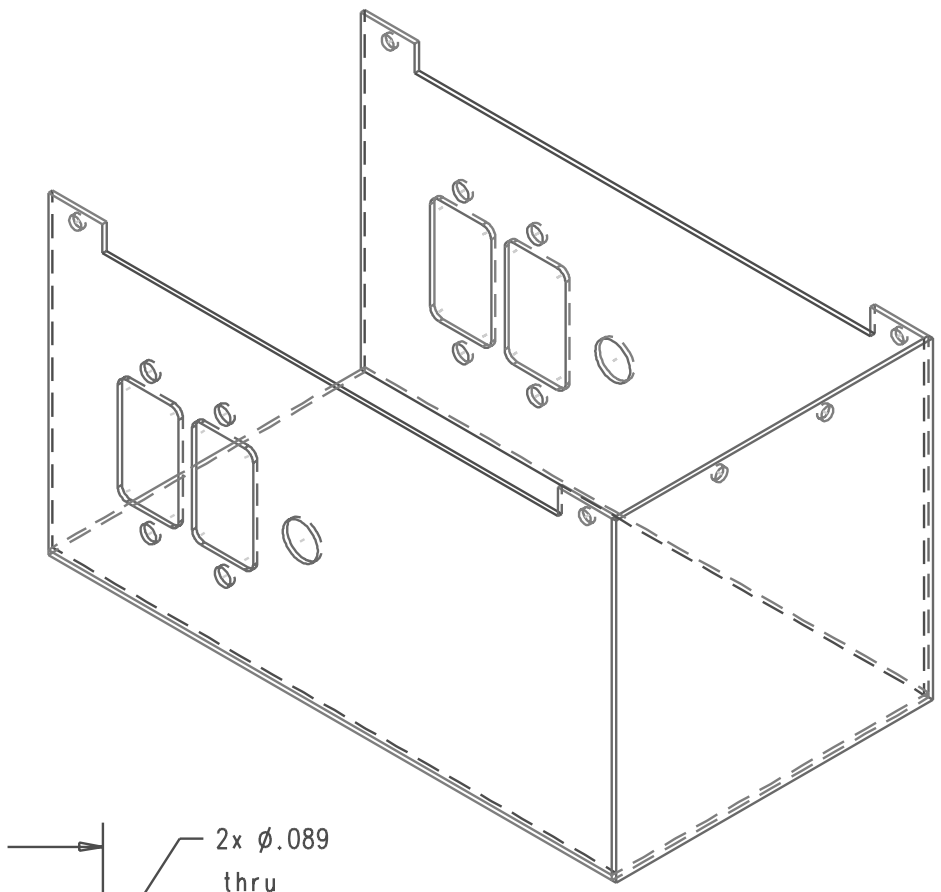

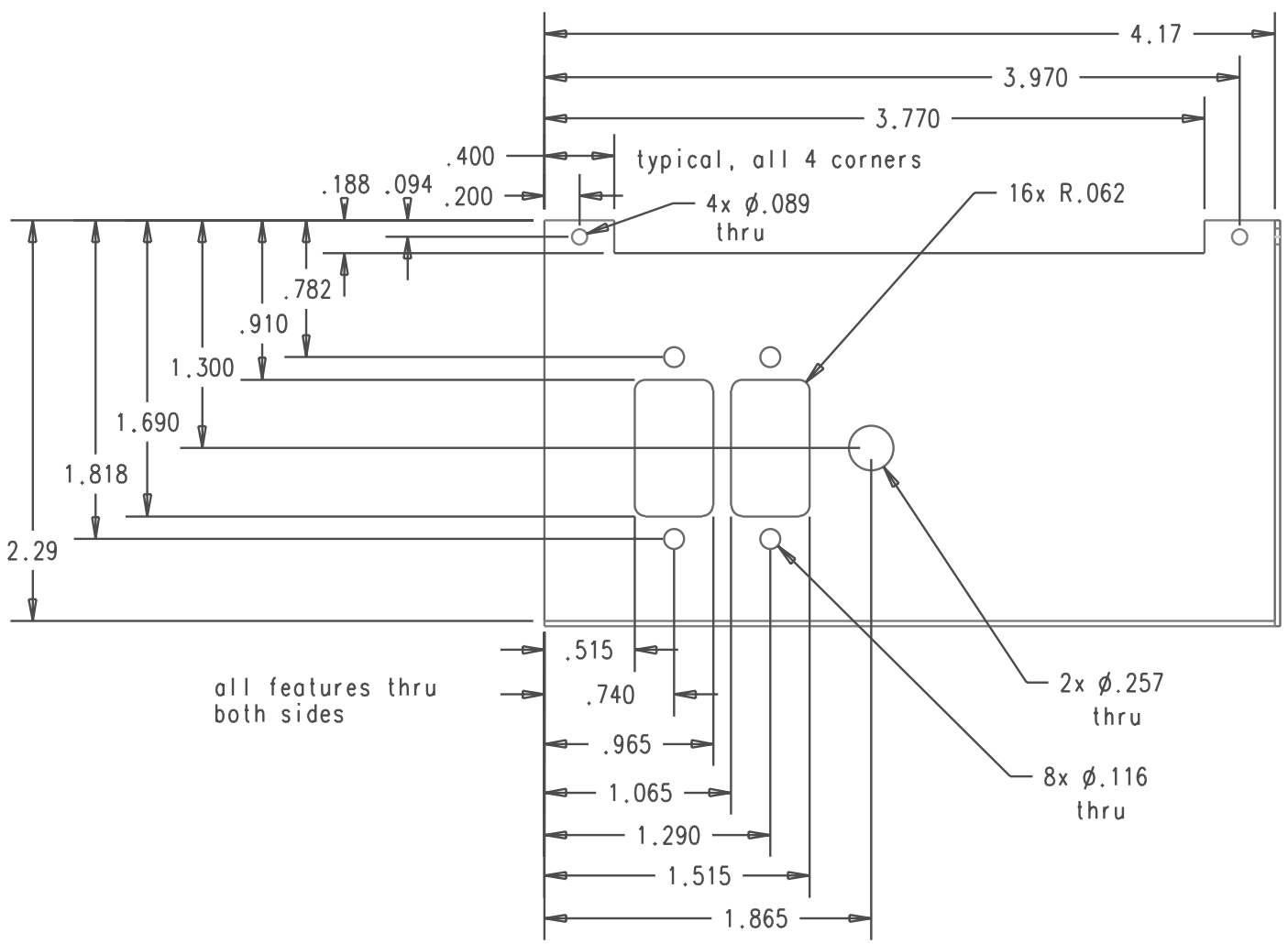

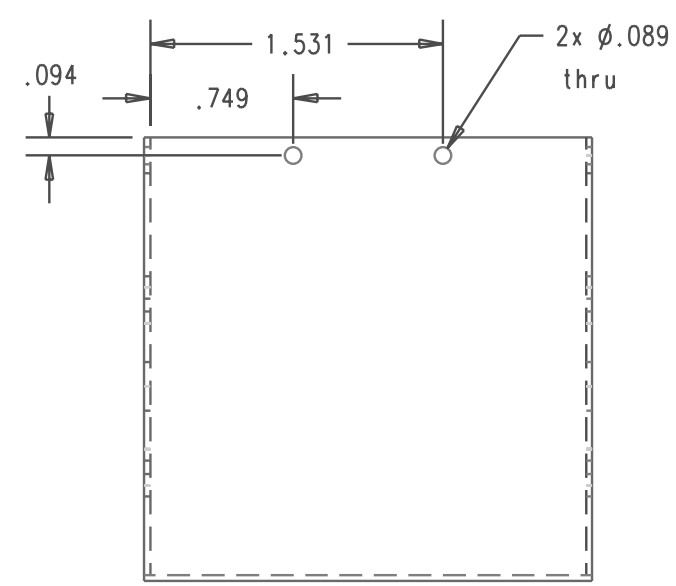

QTY REQD	FSCM NO	PART OR IDENTIFYING NO	NOMENCLATURE OR DESCRIPTION	MATERIAL SPECIFICATION	ITEM NO
1			PARTS LIST	1/16" AL	

UNLESS OTHERWISE SPECIFIED
DIMENSIONS ARE IN INCHES
TOLERANCES ARE:
FRACTIONS ± DECIMALS .XX= +/-.01 .XXX=+/-.005 ANGLES ±
DO NOT SCALE DRAWING

TREATMENT

FINISH

SIMILAR TO | ACT. WT | CALC WT

CONTRACT NO. 100102-7SS70

APPROVALS	DATE
DRAWN	8/4/99
CHECKED	
ISSUED	

Dan Helmick (4-3226)
Emp. No. 111739

TITLE
IMU Cover

SIZE B | FSCM NO. | DWG NO.

SCALE 1:1 | SHEET