| DWG. NO. | SH | REV. |
|---|---|---|
| | | |

REVISIONS

| ZONE | REV | DESCRIPTION | DATE | APPROVED |
|---|---|---|---|---|
| | | | | |

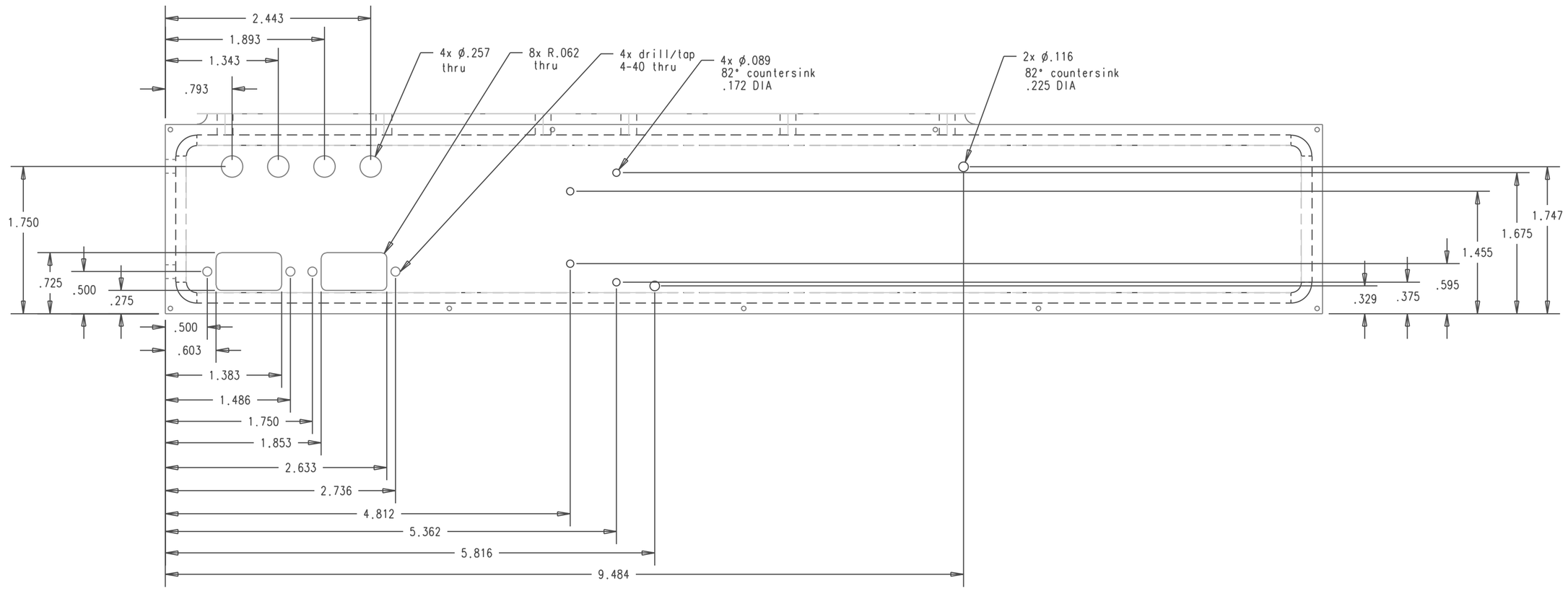


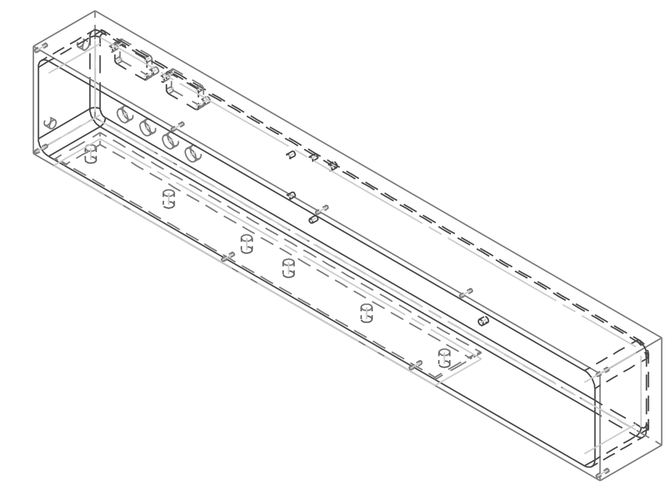

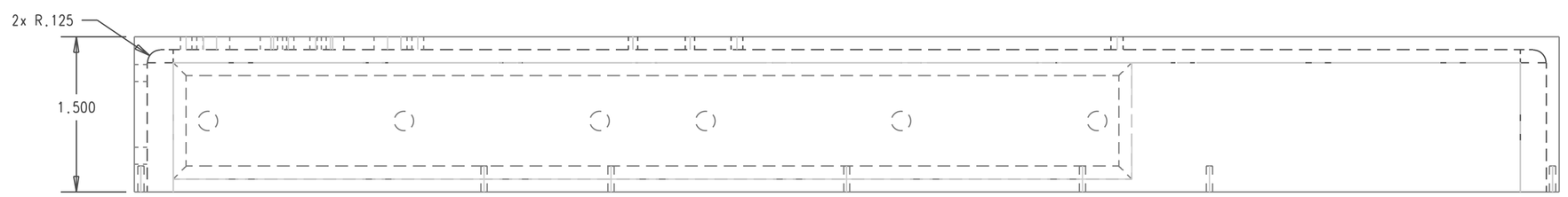


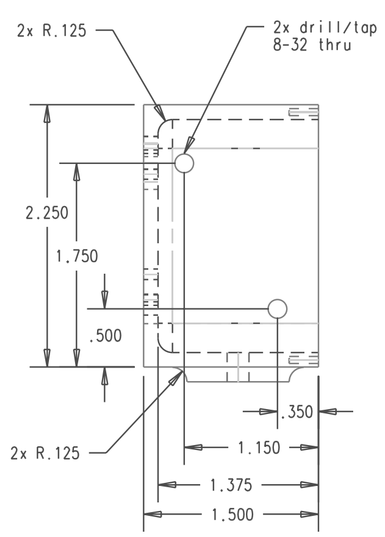


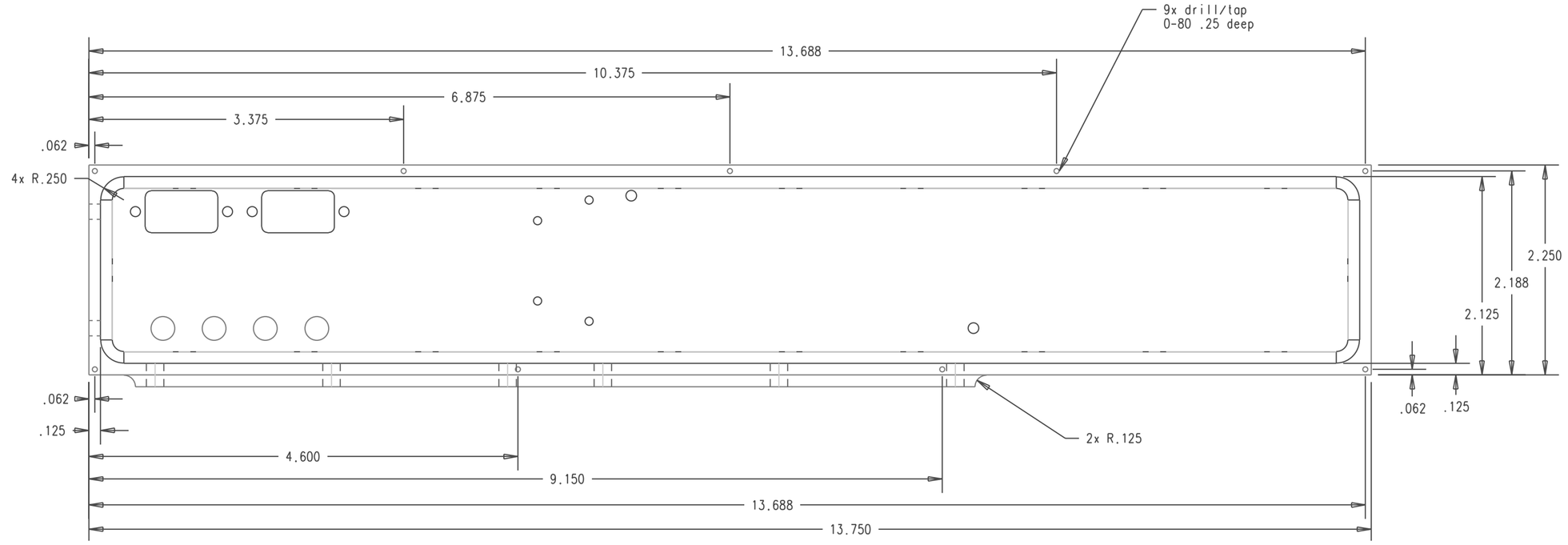


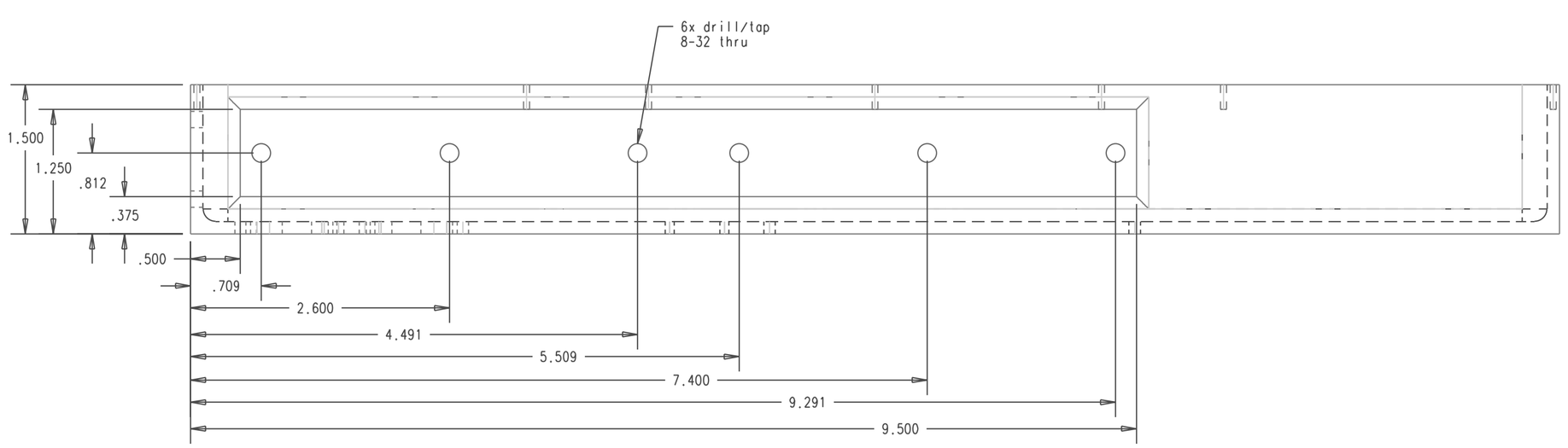


| QTY REQD | FSCM NO | PART OR IDENTIFYING NO | NOMENCLATURE OR DESCRIPTION | MATERIAL SPCIFICATION | ZONE | ITEM NO |
|---|---|---|---|---|---|---|
| 1 | | | PARTS LIST | 7075 AL | | |

UNLESS OTHERWISE SPECIFIED DIMENSIONS ARE IN INCHES
TOLERANCES ARE:
FRACTIONS ± DECIMALS .XX- .XXX- +/-.005 ANGLES ±
DO NOT SCALE DRAWING

CONTRACT NO. 100102-7SS70

Dan Helmick (4-3226)
Emp. No. 111739

| APPROVALS | DATE |
|---|---|
| DRAWN | 8/27/99 |
| CHECKED | |
| ISSUED | |

TITLE
Mast Camera Main Box

TREATMENT

FINISH
gold anodize

SIMILAR TO | ACT. WT | CALC WT

SIZE D | FSCM NO.

SCALE 1:1 | SHEET