DWG. NO.	SH	REV.

REVISIONS

ZONE	REV	DESCRIPTION	DATE	APPROVED

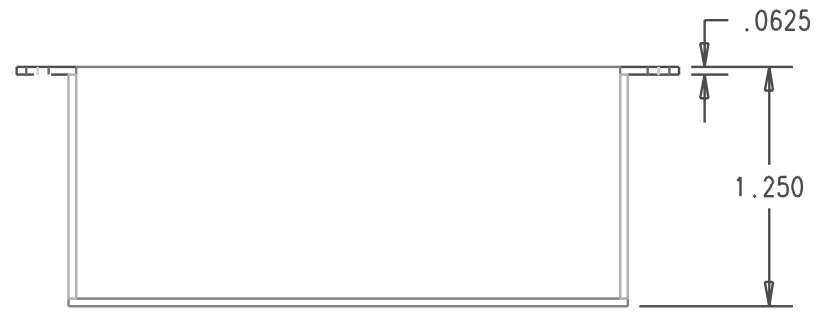

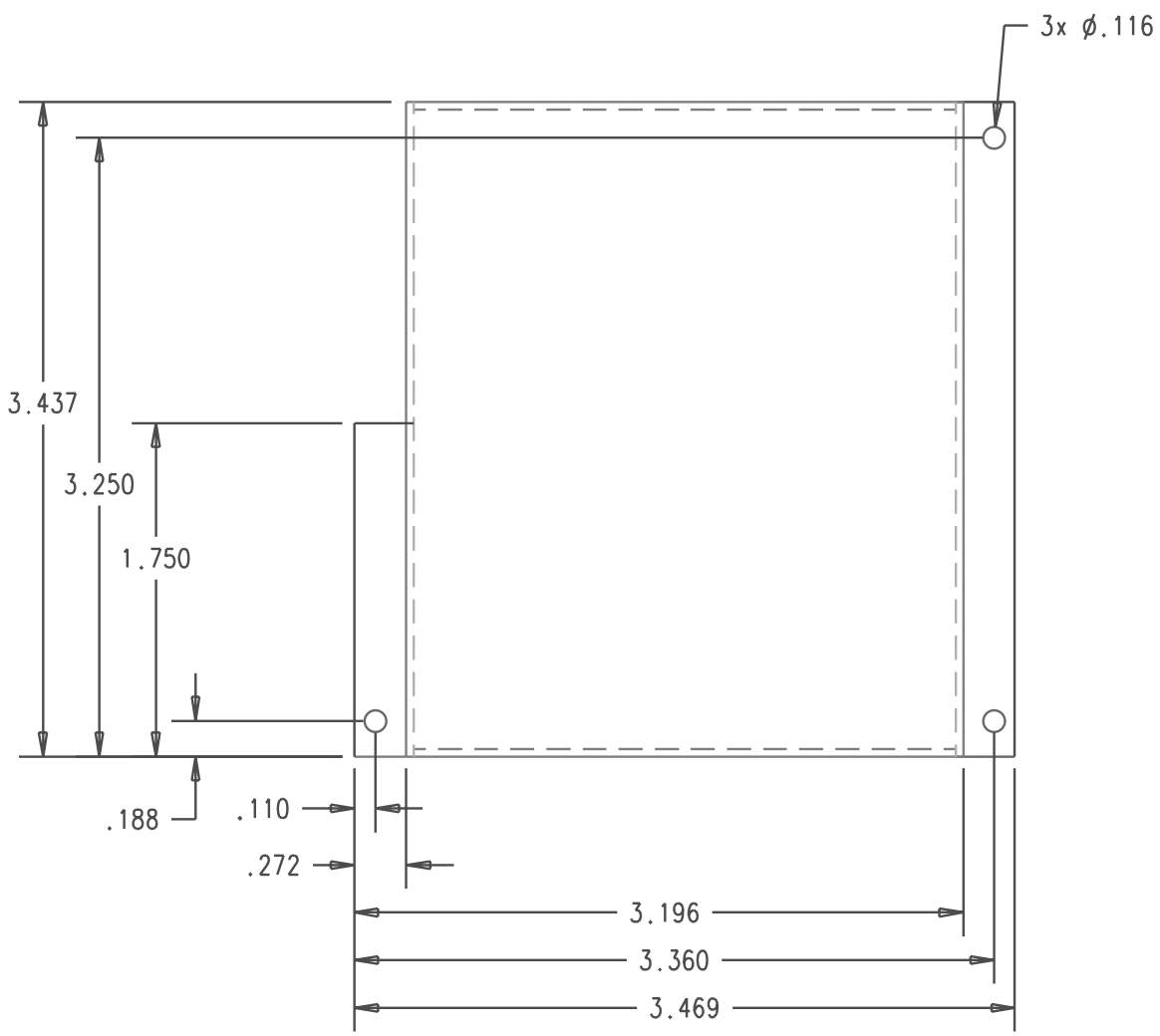

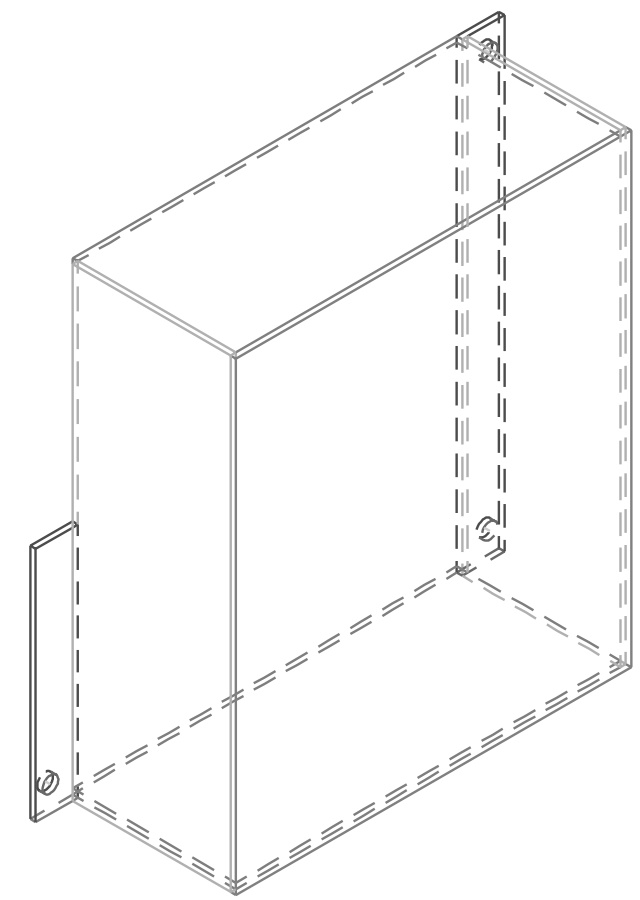

QTY REQD	FSCM NO	PART OR IDENTIFYING NO	NOMENCLATURE OR DESCRIPTION	MATERIAL SPECIFICATION	ITEM NO
2			PARTS LIST	1/16" AL	

UNLESS OTHERWISE SPECIFIED DIMENSIONS ARE IN INCHES
TOLERANCES ARE:
FRACTIONS ± DECIMALS .XX= .XXX= +/-.010 ANGLES ±
DO NOT SCALE DRAWING

TREATMENT

FINISH

SIMILAR TO | ACT. WT | CALC WT

CONTRACT NO. 100102 -7SS70

APPROVALS	DATE
DRAWN	10/20/99
CHECKED	
ISSUED	

Dan Helmick (4-3226)
Emp. No. 111739

TITLE
Mast Side Access Panel
Rev. D

SIZE B | FSCM NO. | DWG NO.

SCALE 1 : 1 | SHEET