DWG. NO.	SH	REV.

REVISIONS

ZONE	REV	DESCRIPTION	DATE	APPROVED

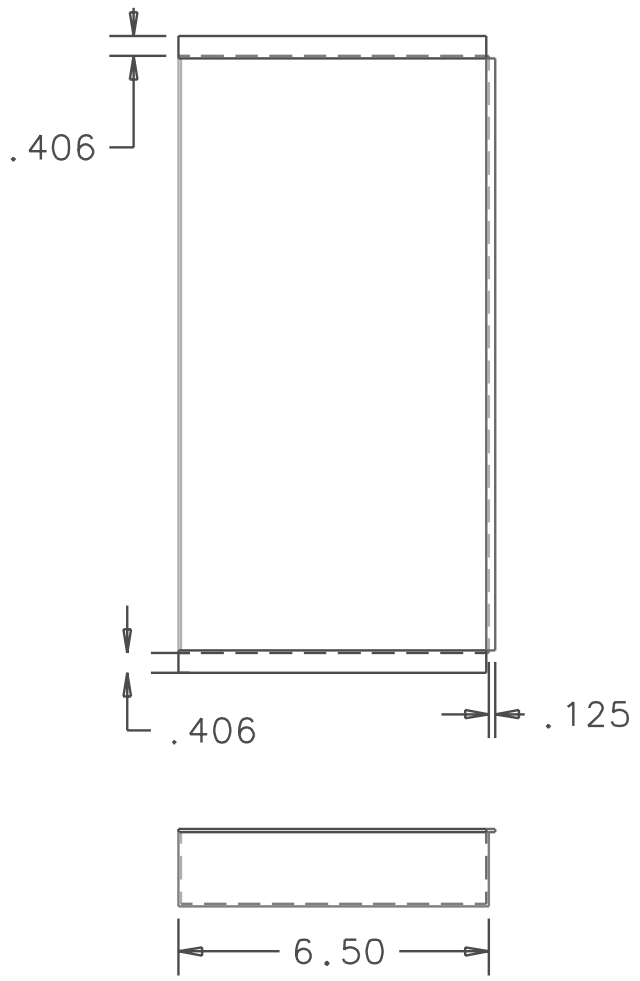

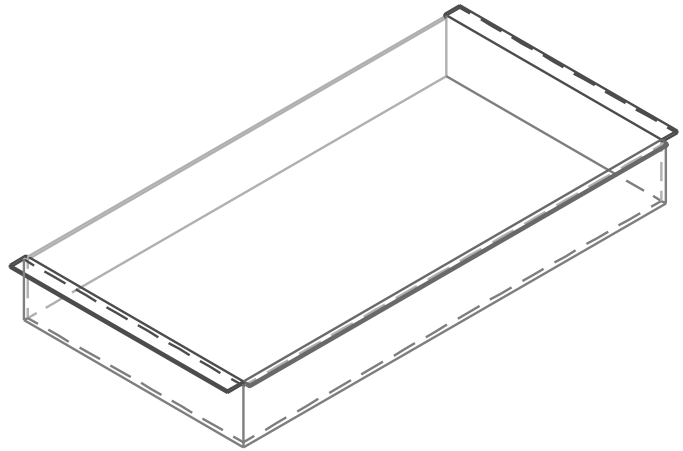

QTY REQD	FSCM NO	PART OR IDENTIFYING NO	NOMENCLATURE OR DESCRIPTION	MATERIAL SPECIFICATION	ITEM NO
1			PARTS LIST	0.040" Al	

UNLESS OTHERWISE SPECIFIED
DIMENSIONS ARE IN INCHES
TOLERANCES ARE:

FRACTIONS	DECIMALS	ANGLES
±	.XX= +/-.01	±
	.XXX= +/-.005	

DO NOT SCALE DRAWING

TREATMENT

FINISH

SIMILAR TO | ACT. WT | CALC WT

CONTRACT NO.

APPROVALS	DATE
DRAWN	
CHECKED	
ISSUED	

Dan Helmick (x4-3226)

TITLE

Tray

SIZE	FSCM NO.	DWG NO.
A		

SCALE | SHEET