DWG. NO.	SH	REV.

REVISIONS

ZONE	REV	DESCRIPTION	DATE	APPROVED

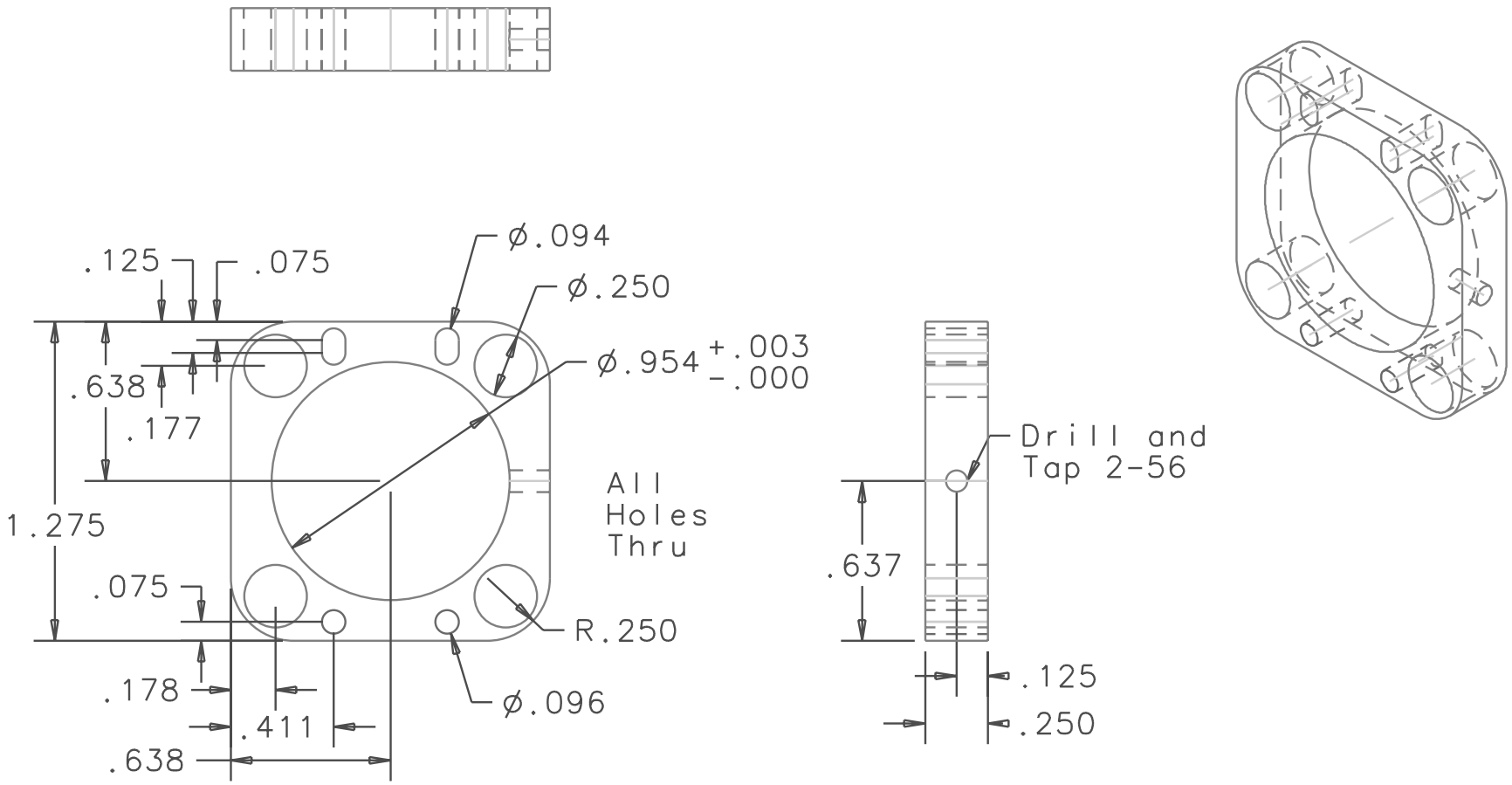

QTY REQD	FSCM NO	PART OR IDENTIFYING NO	NOMENCLATURE OR DESCRIPTION	MATERIAL SPECIFICATION	ITEM NO
6			PARTS LIST	Al 6061	

UNLESS OTHERWISE SPECIFIED DIMENSIONS ARE IN INCHES TOLERANCES ARE:

FRACTIONS ± DECIMALS .XX= .XXX= +/-.005 ANGLES ±

DO NOT SCALE DRAWING

TREATMENT

FINISH

SIMILAR TO | ACT. WT | CALC WT

CONTRACT NO.

APPROVALS	DATE
DRAWN	
CHECKED	
ISSUED	

Dan Helmick (818-354-3226)

TITLE

Widget Bracket Rev. c

SIZE A | FSCM NO. | DWG NO.

SCALE 1.5:1 | SHEET